USER´S MANUAL

Instructions for Operation, Maintenance and Installation

AdBlue® dispenser

ADAST MAJOR

V-line AdBlue®47xx.xxx

CE 1383

Adast Systems, a.s., 679 04 Adamov No. 496, Czech Republic
T +420 516 519 201, **F** +420 516 519 102, sales@adastsystems.cz

MKT 010-004-2007/A
VII/2017

www.adastsystems.cz

OBSAH

1. IMPORTANT NOTICE 1

2. USE 2

3. INSTRUCTIONS FOR THE SAFETY OF WORK 2

3.1. Safety of the equipment design 2
3.2. Operation safety 3
3.3. Ecological safety 3
3.4. Hygiene 3

4. DESCRIPTION 4

4.1. Design of the dispenser 4
4.2. Skeleton of the dispenser 4
4.2.1 Case of the electronic counter 4
4.2.2 Case of the electronic counter – design 2017 (see fig.) 4
4.3. Hydraulic system of V-line AdBlue® 47xx.xxx dispenser 6
4.3.1 Filter 8
4.3.2 Piston flow meter 8
4.3.3 Electromagnetic(solenoid) valve 9
4.3.4 Delivery hose AdBlue® 9
4.3.5 Delivery nozzle AdBlue® 9
4.3.6 Connection elements 9
4.4. Electronics 9
4.4.1 Communication to the control system 10
4.5. Signalling of dispenser conditions (SO) 10
4.6. SOPA design 11
4.7. Design with heating of the electronic case 11
4.8. Heating of hydraulic housing 11

5. TECHNICAL DATA 11

6. MARKING 12

7. INSTALLATION 12

7.1. Hydraulic part 12
7.2. Wiring 13

8. PUTING INTO OPERATION 13

8.1. Puting of the AdBlue® dispenser to operation mode 13
8.2. Puting of AdBlue® dispenser to OFF mode 14
8.3. New reseting of AdBlue® dispenser into operation after power supply failure 14

9. OPERATION 14

10. FUNTION OF MANAGER AND SERVICE KEYBOARD 14

10.1 Manual setting of unit prices 15

10.2 Setting of unit price values from the control system in AUTO mode 16
10.3 Display of electronic totalizers 16

11. MAINTENANCE OF A DISPENSER AND ITS INDIVIDUAL OPERATING UNITS 17
11.1. Filter 17
11.2. Piston flowmeter 18
11.3. Electromagnetic two-stage valve 18
11.4. Sight glass of the dispenser 18
11.5. Dispensing hose 18
11.6. Dispensing nozzle 18
11.7. Dismantling of covers 18
11.8. Electronic counter 19
11.9. Maintenance instructions for dispenser body parts 19

12. SUMMARY OF BASIC PRINCIPLES FOR DISPENSER MAINTENANCE 20

13. DISASSEMBLY AND DISPOSAL 20

14. TRANSPORT 20

15. PACKING AND STORAGE 21
15.1. Packing 21
15.2. Storage 21

16. GUARANTEE AND CLAIMING 21

17. SPARE PARTS CATALOGUE 22

18. ACCESSORIES 22

19. DELIVERED DOCUMENTATION 22

20. ENCLOSURES 22

1. IMPORTANT NOTICE

This document is user guide, how to provide installation, operation and maintenance and service of AdBlue® dispenser.

Stated information in this manual is strictly recomended and producer can not response for damages caused by non keeping rules described in this guide.

ATTENTION!
AdBlue® dispenser **V-line 47xx.xxx AdBlue® designed for filling stations is determined only for delivery of reduction medium AUS 32 ISO 2224.**

It is not allowed to use such AdBlue® dispenser **for delivery of flammable fluids !**

ATTENTION!
AdBlue® is solution of pure urea and desalted clear water with 32,5 % content of urea.
Solution is used as reducing agent for lowering of nitrogen emissions NO_x in diesel powered engines - in special SCR catalysator (SCR - „selective catalytic reduction").
AdBlue® is highly corrosive !
AdBlue® begins to crystalize at a temperature - 11 °C!
To guarantee proper function of SCR catalysator in motor vehicle is necesarry to provide regullar check of solution quality AdBlue® as per norm ISO 22241!
Quality, chemical consistence and physical characteristic of solution AdBlue® must be in accordance with norm ISO 22241-1!

International marking of reducing agent AdBlue®:

AUS 32 ISO 22241

Therefore before puting AdBlue® dispenser into operation must be checked clean surface of storage tank(s), entering pipeline(s) and purity of dispensed medium - AdBlue®. Further must be provided revision of power wiring and check of electric connections, to prevent electric shock.

Every AdBlue® dispenser is tested in production plant for funtionality, safety and metrology. Every delivery contains user´s manual , ES declaration of conformity and service book with units identification of the AdBlue® dispenser. AdBlue® dispenser is designed and produced carefully to provide long term safety work.During installation and operation must be kept basic safety rules to prevent device user from potential injuries.

It is not allowed to provide any hardware changes without written permit of the manufacturer.

- **Important instructions for installation and operation:**

a) Please study carefully the user´s manuall and other documentation efore manipulation with the AdBlue® dispenser.

b) Please study the delivery content and if you find any discrepancy inform the supplier imediatelly.

c) In time period before installation the AdBlue® dispenser provide storage inside dry protected space.
The AdBlue® dispenser can not be stored in place with temperature bellow zero(freezing space).

d) Before the installation check completnes of technology as per valid project and check the delivery pipelines including the connecting fittings.

e) **Provide the flushing of technological unit (pipeline systems) by filter unit AdBlue®. Keep flushing untill filter unit will apear clean.**

ATTENTION!
FOR CLEANING OF PIPELINE SYSTÉM MAY NOT BE USED PETROLEUM PRODUCTS OR ANY OTHER CHEMICALS ABLE TO CONTAMINE DELIVERED MEDIUM AdBlue®!

f) Provide electric connection of AdBlue® dispenser and revision.

g) Strictly follow the manual.

h) By complete of these conditions can be unit set to operation mode.

i) Service operations and installation can be provided only by trained service persons.
Service operation must be in accordance with operation rules of the filling station.
Producer does not response for damages made by non qualified persons.

j) **Provider can start delivery after close of filling station revision and after official metrologic inspection of** AdBlue® dispensers.

k) **By delivery of the AdBlue® must be kept basic hygienic rules. Provider must allow to the buer to use hand protection like as ecoplastic sloves.**

l) **During operation of** AdBlue® dispenser **in winter time (ambient temperature lowering (T_{amb}.) under freezing point) must be permanent switch on heating function of** AdBlue® dispenser **and storage container. This notice is valid even the filling station i sout of order.**

PLEASE STORAGE THIS MANUAL FOR NEXT USE!

2. USE

AdBlue® dispensers of type line **V-line AdBlue® 47xx.xxx** is designed for delivery AdBlue® into vehicles with diesel engine. AdBlue® is reducing agent AUS 32 ISO 22241, used in vehicle catalysators powered by diesel with catalic selective reduction for lowering of emissions NO_x.

They have been designed for the installation at road filling stations and a fleet of vehicles, etc.
By means of a communication line the dispensers are connected to the control system of self-service operation or serviced operation.

The dispensers are equipment with special requirements concerning safety, metrology and ecology.

ATTENTION!
AdBlue® dispenser V-line AdBlue® 47xx.xxx can be operand only with reduction agent AUS 32 ISO 22241.
Any use for delivery of flammable fluids is not allowed !

3. INSTRUCTIONS FOR THE SAFETY OF WORK

3.1. Safety of the equipment design

AdBlue® dispenser **is designed for installation to outside conditions**	
Enviromental class	**C (outside - stationar)**
Mechanical class	**M 2 - for electronic Beta Control ADPxxx**
	M 1 - for electronic UNIDATAZ CDC
Electromagnetical class	**E 2 - for electronic Beta Control ADPxxx**
	E 1 - for electronic UNIDATAZ CDC
Enviroment humidity	**With condensation**

ATTENTION!
AdBlue® dispenser may not be installed to danger explosive zone 0, 1, 2 in meanings of dedicated zones as per ČSN EN 60079-10-1!

From point of technical requirements settled for measurement units was at the AdBlue® dispenser performed EU type examination (type certification) according to Annex II, Module B of the Directive of European Parliament and the Council 2014/32/EU authorised body - Český metrologický institut, Okružní 31, 638 00 Brno - Notified body No. 1383.

EC - Type Examination Certificate: No. TCM 141/07 - 4518

For the AdBlue® dispenser has been made conformity assesment by type described in EC - Type Examination Certificate No TCM 141/07 - 4518 and technical requirements according to Annex II, Module D of the Directive of European Parliament and the Council 2014/32/EU

The producer is competent for "The Declaration of Conformity" with the type based on production quality assurance of measuring units according to Annex II, Module D of the Directive of European Parliament and the Council 2014/32/EU

Certificate of the Quality Management System for production, check-out and testing according to Annex II, Module D of the Directive 2014/32/EU: No. 0119-SJ-C007-07

3.2. Operation safety

The owner is responsible for the filling station operation and is obliged to observe the course of AdBlue® pumping. In case a customer uses the dispenser incorrectly, the owner shall instruct him about proper use. Operation regulations of the filling station shall be accessible for the customer, which enables him to get information on principal obligations.

Operator's obligation:

- Keep the equipment in safe and proper condition.
- Follow the operation regulations and attendance instructions of the filling station.
- Report immediately any failure to the owner and put the equipment out of operation in case of delay.
- Keep order permanently.
- The dispenser and storage tank operators are not allowed to repair the equipment and to reset any safety valves.

Performance of service work is a special case. **Servicemen are not allowed to break operation safety during repairs and other activities.** When dispenser covers are removed, they shall be very careful to protect both them and customers against injury.

El. current supply shall be disconnected when handling el. components. Only approved components shall be used to replace any parts.

All parts subject to approval shall be always in conditions required by the technical documentation (leakproofness, earthing, electrostatic belts, electrostatically conductive filling hoses, etc.).

3.3. Ecological safety

Dispenser V-line R AdBlue® is in terms of running for ecologically safe environment. The urea solution was placed by the evaluation of substances hazardous to water class 1 (slightly hazardous for water. The high solubility of urea in water prevents absorption into the soil.

3.4. Hygiene

ATTENTION!
The dispensers are hygienically harmless for customers and the owner. But protective gloves are advised to be used during maintenance or filling AdBlue®.

In case skin comes to contact with fuel or impurities, wash the spot with water and soap as soon as possible. When eyes come to contact, medical treatment is necessary. Do not inhale harmful vapours when filling AdBlue®.

4. DESCRIPTION

4.1. Design of the dispenser

The V-line R AdBlue® 47xx.xxx dispensers with electronic counter are used to the dispensing of AdBlue® .

These dispensers are one-sided or two-sided simultaneous output of 1 products.

The dispensers are designed as self-holding sectional construction.

The V-line R AdBlue® 47xx.xxx dispensers with automatic hose winding are manufactured in two modifications:

type V-line R AdBlue® 4701.100, 4701.010 – 1 product, 1 nozzle

type V-line R AdBlue® 4701.200, 4701.020, 4701.110 – 1 product, 2 nozzles (one sort of product two filling points)

Construction of V-line R AdBlue® 47xx.xxx dispensers consist from following basic modules:

- skeleton
- hydraulic system
- electric equipment

4.2. Skeleton of the dispenser

Skeleton – a self-supporting construction consisting of parts with high anticorrosive resistance. The base of the dispenser is made of steel sheet and heat zinc-coated. Internal parts of the skeleton are made of stainless sheet. Parts of the body with the exception of the door of the hydraulic module and the electronic counter case are made of stainless brushed sheet as a standard.

The doors of the hydraulic module and the electronic counter case are finished by high resistence acrylate painting. The colour shade of the door including the logo can be optional.

Both doors are lockable; being unlocked, swing out and with earth wire disconnected they can be removed and thus the hydraulic part including electric switch box are accessible. Connect the earth wires when the door is fitted back.

A case of the electronic counter or ADAMAT electronics is bolted to the hose module column. The counter case space is closed with lockable covers. The covers are provided with transparent glass. Indicators with integrated large-area display of dispensed volume, total price of dispensed volume and a price for one unit of dispensed volume are connected from the case interior to the covers or unresetable electromechanical total counters (totalizers) and modules of fuel price per unit are integrated to the indicator. The set of these elements represents all necessary information for the customer.

The covers of the case are hung up on hinges enabling tilting upwards after unlocking and thereby easy access in the case interior. The user's local preselection keyboard is located on the case cover as well.

The dispensing nozzles are seated in covers in the „V" form pressed shape of the column and bearers of the hose module. When the dispenser is out of operation the dispensing nozzles in covers can be locked.

4.2.1 Case of the electronic counter

The counter case space is closed with lockable covers. The covers are provided with transparent glass. Indicators with integrated large-area display of dispensed volume, total price, price for one unit and unresetable electromechanical total counters (totalizers) are connected from the case interior to the covers. The set of these elements represents all necessary information for the customer.

The covers of the case are hung up on hinges enabling tilting upwards after unlocking and thereby easy access in the case interior. The user's local preselection keyboard (if required) is located on the case cover as well - an independent keyboard for each dispensing point.

4.2.2 Case of the electronic counter – design 2017 (see fig.)

The counter case (1) space is closed with lockable covers (2). The covers are provided with transparent glass.

On the inside cover of the case is mounted under glass large-area display (3) issued volume and total price, which displays all necessary information for the customer.

Above the display is placed IR sensor (5) for controlling and adjusting the dispenser calculator manager or servicing keyboard.

On the outer side of the case cover is placed (optional) keyboard local user preferences (4) - an independent keyboard for each dispensing point.

On request they can be built in a case unresetable electromechanical total counters – totalizers (6), which are accessed by opening the cover.

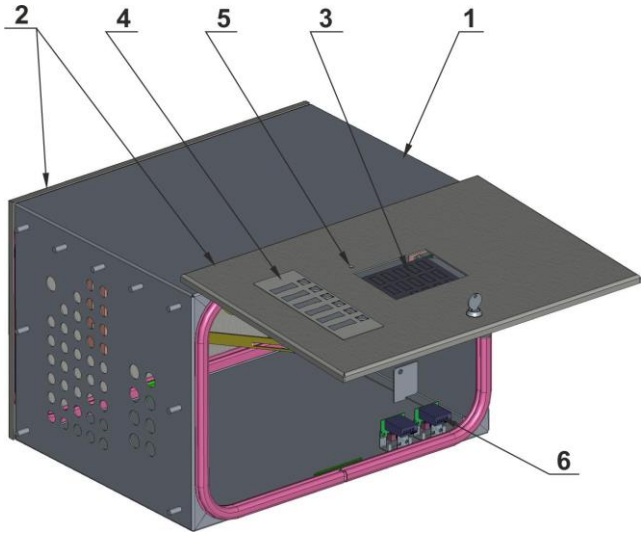

ATTENTION!
Before opening the covers, it is always necessary to disconnect power to the dispenser and perform a reliable hedge against its re-connection.

4.3. Hydraulic system of V-line AdBlue® 47xx.xxx dispenser

Figure. 1 – Hydraulic scheme of V-line AdBlue® 47xx.xxx dispenser

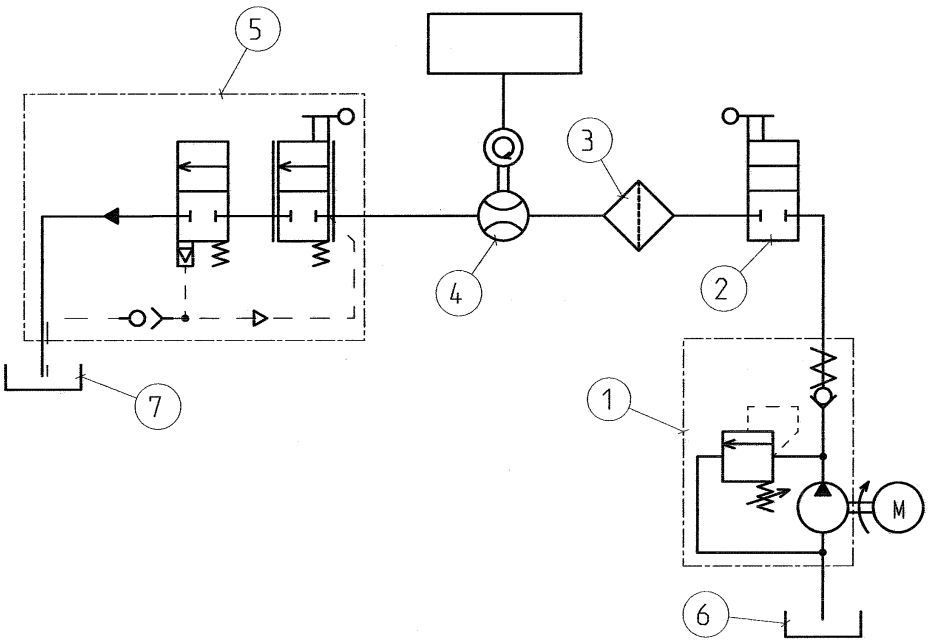

Legend	
1	Submersible pump
2	Closing valve
3	Filter
4	Electronic meter ADAST M 403.25 EAP/1 + el. counter ADP1/L, ADP1/T, ADP2/T
5	Delivery nozzle
6	Storage tank of **AdBlue®**
7	Vehicle tank

Hydraulic system of the V-line R AdBlue® 47xx.xxx dispenser consisting of components (Figure 2):

Position number	Components of AdBlue® hydraulic system of the AdBlue® dispenser
1	Ball valve G 1"
2	Drain ball valve
3	Filter AdBlue®
4	Connecting pipe between the filter and meter
5	Meter flange
6	Four-piston all-aluminium AdBlue® meter with integrated magnetic pulse transmitter ADAST M 403.25EAP/1
7	Magnetic pulse transmitter METRA MTX 076 or ADAST41
8	Valve flange
9	AdBlue® electromagnetic valve
10	Hose adaptor DN 16
11	Hose DN 16 to the nozzle
12	Heating of hydraulic housing

Figure. 2

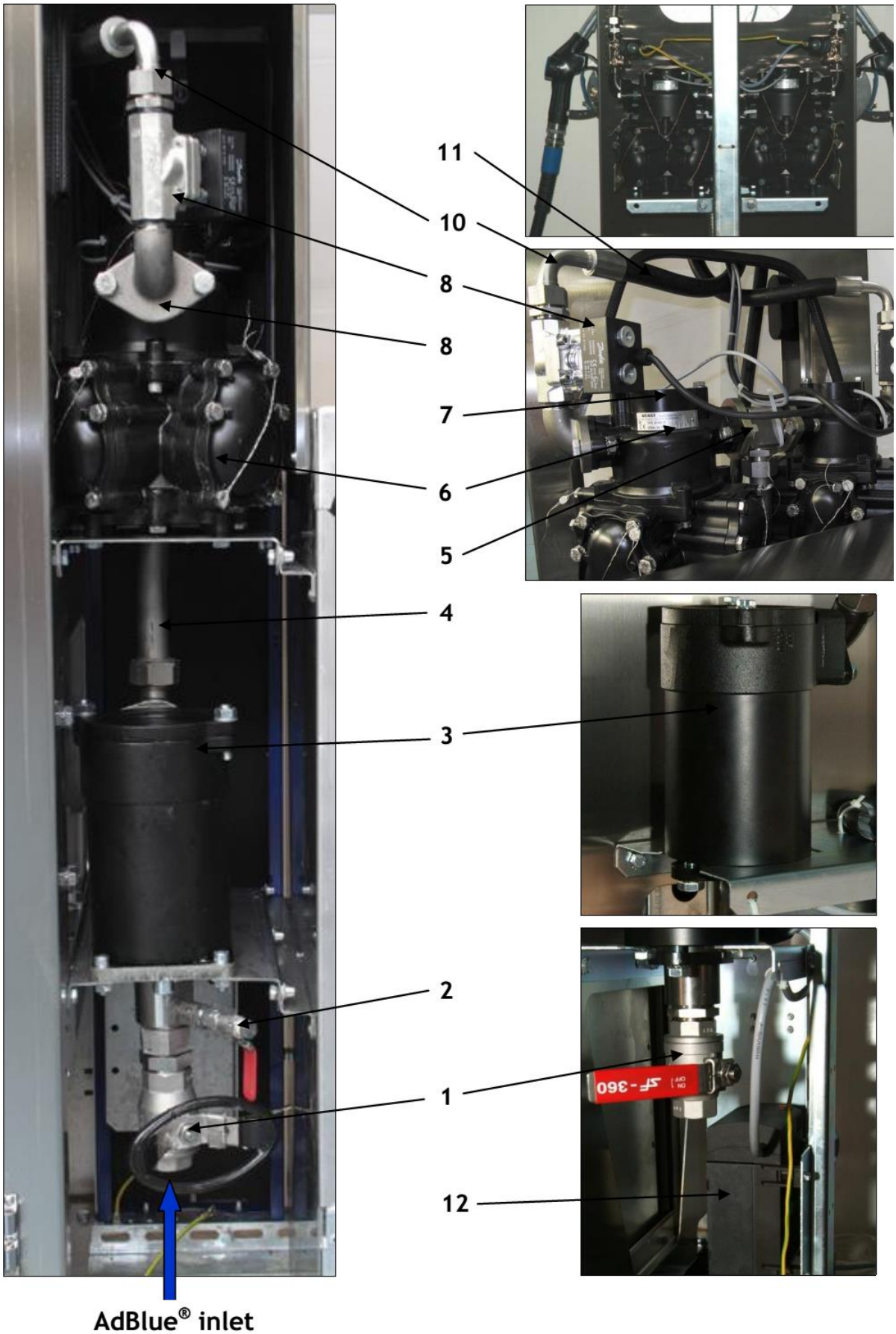

V-line AdBlue® 47xx.xxx **series dispensers (pressure design)** differ from suction dispensers because they are not equipped with the pumping monoblock. A safety breaking valve shall be fitted in the connection. The valve prevents AdBlue® leakage in case of the dispenser damage. This valve is not a part of the dispenser, as well as the pump, which is located in the underground tank. The pressure dispensers are equipped with an inlet spherical valve for closing the AdBlue® input in case of repairs.

The pumped AdBlue® is supplied from the central submerged pump located directly in the fuel storage tank through the safety breaking valve, spherical check valve and the filter with filtering property of 60 µm. Liquid is discharged from the filter through the meter and the electromagnetic valve to the dispensing hose with the dispensing nozzle at its end. The dispensing nozzle lever controls the rate of flow.

The pressure system of the distribution should be designed with a submerged pump built-in directly into the storage tank under the substance level. The tank should be equipped with a detector of the lowest substance level switching the el. circuit of the pump motor being the min. level attained.

The location of the pump under the lowest fluid level in the storage tank and the min. level control switch shall prevent the access of air or gas into the pump.

P12 = 0 parameter shall be preselected in the electronic counter for the pressure system of submerged pumps operation in the storage tank in case of V-line AdBlue® 47xx.xxx dispensers operation. At first the electronic counter starts up the submerged pump in this mode of operation (the fluid in entire hydraulic system is under pressure) then the counter tests the displays and closes the el. magnetic valve - and the dispensing is started. Applying these conditions is the requirement 5.1.3 OIML R 117-1 2007 (E).

4.3.1 Filter

Whole metalic filter (pos.3) is connected by connection (pos. 4) to inlet of the meter (pos. 4) – to meter flange (pos. 5) and closing stainless baal valve (pos. 1).

Filter is equipped by stainless filter insert with filtration ability 60 µm.

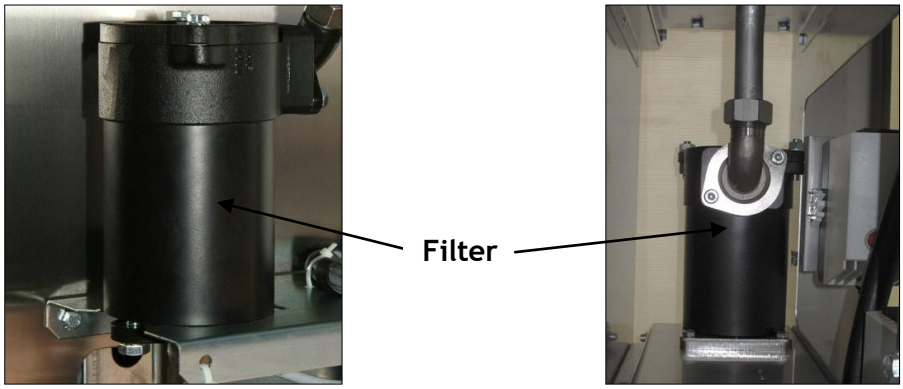

ATTENTION!
Filter is designed as meter protection from mechanical damage contained imide of dispensed medium AdBlue®. Purity of dispensed medium AdBlue® must be guaranted by medium subsupplier and permanent clean policy of storage space inside of storage container.

4.3.2 Piston flow meter

Measuring unit consists from four piston unit and integrated magnetic encoder. Measuring unit is measuring in flow rate range 4 - 40 $dm^3.min^{-1}$ and operational temperatures of measured medium - 10 až +30 °C and ambient temperature -40°C to +55 °C for nominal pressure up to 0,32 MPa.

Encoder is reading spins of magnet disc connected to central shaft and transfering the spins to electronic signal.

Meters are supplied with optional integrated magnetic pulse transmitter METRA MTX 076 or ADAST 41 - M 403.25AP/1, M 403.32EAP/1.
Meters with the designation of EP in electronic calibration, indicating P mechanical calibration.

4.3.3 Electromagnetic(solenoid) valve

Electromagnetic valve is placed on meter output. Valve control is provided by electronic counter. Body of the valve is nicle plated, pistons and bushes are finished from material on teflon basis.

Electromagnetic valve is supplied as option upon costumer request.

4.3.4 Delivery hose AdBlue®

Delivery hose AdBlue® is finished from speciall rubber designed for AdBlue®. Delivery hose is placed on hose reel and ended by delivery nozzle.

4.3.5 Delivery nozzle AdBlue®

Speciall finishing of components delivery nozzle ELAFLEX AdBlue® made from materials resistent to medium AdBlue®. The nozzle is equiped by automatic closing valve, function STOP system preventing tank overfilling and by swivel.

Inside of nozzle spout is build in magnetic valve.The dispensing is possible only if the defined magnetic zone in filling inlet of vehicle tank will open magnetic svitch in spout of delivery nozzle. By this safety fiction is eliminated to fill different fuel tank by product AdBlue®. Delivery nozzle is hanged in speciall vertical cover imide of external module of AdBlue® dispenser. Nozzle space is covered by front doors a in temperature fall down is heated.

The nozzle with covering doors can be locked if the station is in off mode.

4.3.6 Connection elements

Connections of hydraulic system of container filling station is made by connecting pipes and fittings made from speciall stainless steels and speciall ruber hose resistent to AdBlue®.

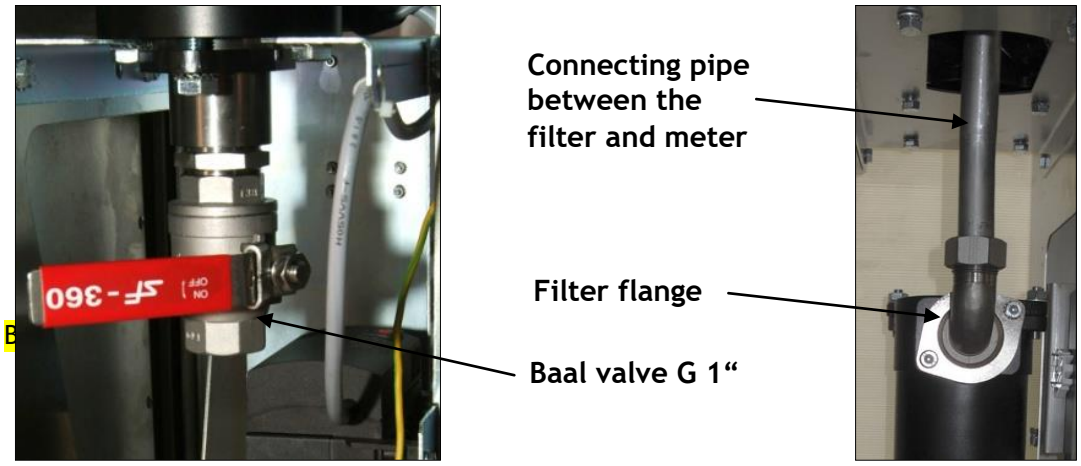

4.4. Electronics

The dispenser control shall meet the exacting requirements of simplicity and convenience and depends on the hanging up and lifting of the dispensing nozzle.

ADPMPD/T, ADPMPD/T-PWM, ADP1/T, ADP2/T, ADP1/L electronic counter of an up-to-date design with central processor board equipped with a high efficient microprocessor. The configuration of the counter and its modes of operation are adjusted by more than seventy parameters. The counter is provided with a self-diagnostic system. The counter outlets control the motors, valves, signalling circuits and vapours exhaustion. The electronic counter processes the impulses coming from the impulse sensor and transmits them to the display, which displays the dispensed volume, its price and a price per a volume unit. In case of power failure or voltage drop the data displayed on the LCD remain for 30minutes at least.

Counters ADPMPD/T, ADP1/T, ADP2/T, ADP1/L are standardly equipped for electronic meter calibration **(Electronic Calibration of Meters - EC)** and per request by **ATC - (Automatic Temperature Compensation).**

Electronic Calibration of Meters (EC) enable to correct measured volume by designed declination in operation range -5,00 % to +5,00 % of recognised meter non accurancy by step of 0,05 %.

Providing of calibration is allowed to authorised person, only. The DIP calibration switches must be fixed by plomb after calibration finish.

Displays: LCD type with BACK LIGHT illumination

LCD displays with BACK LIGHT DISPLAY (BLD) **illumination** are used especially for their good readability. The duration of data holding on the display after supply voltage failure is 30 minutes at least. Decimal point on BLD display devices is represented automatically in accordance with the setting of parameters.

Lighting

LED diodes are used for the illumination of displays at dispensers.
ON / OFF switching of the illumination is automatically carried out with the activation of electronics.

Totalizer: non-resettable electronic counter of dispensed volume and its price – 11 digits – or non-resettable electromechanical counter of dispensed volume – 7 digits.

Electronic counter of ADPMPD/T, ADPMPD/T-PWM, ADP1/T, ADP2/T, ADP1/L series operates with a 2-channel impulse generator producing 2x 100 impulses per 1 dm^3. The HW and SW counters of the ADPMPD/T, ADP1/T, ADP2/T, ADP1/L series enable high metering accuracy and the application of the electronic calibration using the 2-channel impulse generator.

IMPORTANT NOTICE:
Connection of the magnetic pulse transmitter ME 01-05, ME 01-05-05, MTX 076 and ADAST 41 to the electronic counter ADP1/L (connector X1), electronic counter ADP1/T, ADP2/T (connector X2) and electronic counter ADPMPDx/T, ADPMPDx/T-PWM (connector X3) - see enclosure 8, 9, 10.

The local electronic preselection system in IP67 design is integrated into the counter case. The preselection enables the Customer's preselection of the exact volume or the price of the product to be dispensed. The two-stage or proportional electromagnetic valves ensure the closing of flow and exact dispensing of the preselected volume / price and smooth initiation of dispensing.

The fuel dispensers can be equipped with ADAMAT filling automatic equipment. This equipment enables dispensing and payment of the product by means of contactless, magnetic and chip cards including receipt printing. This equipment undertakes simultaneously all functions of the dispenser electronic counter for non-public and public dispensing. The electronics of the filling automatic equipment can be complemented by the ADPMPD/T, ADPMPD/T-PWM, ADP1/T, ADP2/T, ADP1/L electronic counter with public dispensing.

The fuel dispenser is connected through a communication line to the control system, which controls the operation of the whole filling station (releasing of dispensers, volume preselection, unit price variation, self-diagnosis, etc.). The dispensers can be operated even at the filling stations without any control system – i.e. in serviced operation.

Circuit diagrams for the connection of individual dispenser types to the switchboard of the filling station – see enclosures.

4.4.1 Communication to the control system

The ADP1/T, ADP2/T, ADP1/calculator can operate independently and/or can be controlled by a site control system.
The calculator is connected to the site control system via the RS-485 line, which is controlled by its own communication protocol EASY-CALL, and /or according to IFSF standards (communication level LON or TCP/IP- Ethernet).
Communication to different control systems shall be consulted with the manufacturer of the dispensers in advance.

The fuel dispensers connected to the control system can be operated in the mode of volume preselection or the financial sum preselection from the control system **(the dispensers have to be equipped with two-stage or proportional electromagnetic valves).**

4.5. Signalling of dispenser conditions (SO)

On Client's special requirement the fuel dispenser can be equipped with a red signal light, which gives information to the customer and the operator about the present dispenser condition – the dispenser is blocked or ready for fuel filling.

4.6. SOPA design

On Client's special request the dispenser in service mode can be equipped with magnetic release switch (SOPA design). The operator of the filling station can release the dispenser for single filling operation in this mode. After nozzle lifting the displays are reset and fuel filling is started.

After hanging up the nozzle, the dispensed volume and quantity values are permanently displayed until the dispenser is magnetic released and the dispensing nozzle is lifted off subsequently. The red signal light informs both the operator and the customer about the condition of the dispenser.

4.7. Design with heating of the electronic case

On the special customer´s requirement the fuel dispenser can be delivered with heating of electronic case by heater 250 W. For feeding of the heating is used an individual cable.

4.8. Heating of hydraulic housing

In the closet hydraulically dispenser is built powerful fan heater with thermostat - power 950 W. Protects interior hydraulic hose module and the module against condensation and thermal protection components of the hydraulic system of the dispenser against crystallization and AdBlue® freezes when temperatures drop below freezing.

5. TECHNICAL DATA

Electronic counter			ADPMPD/T, ADP1/T, ADP2/T, ADP1/L		
Tankautomat (CRID)			ADAMAT/PNN, ADAMAT/PNA, ADAMAT/EMV		
Display			Iluminated LCD - BACK LIGHT DISPLAY (BLD)		
			ADAMAT - Graphic BLD, Touch screen		
Connecting piece – pressure system			DN 25 with external screw G 1"		
Minimum innner diameter required			DN 16 (stainless pipe or special rubber hose for AdBlue®)		
			Alternative DN 19 – rubber hose for AdBlue®		
Measured fluid			AUS 32 ISO 22241 (AdBlue®)		
Accuracy of measurement			± 0,5 %		
Max. operating pressure p_{max}			0,32 MPa		
Min. operating pressure p_{min}			0,12 MPa		
Max. flow rate Q_{max}			40 $dm^3.min^{-1}$	20 $dm^3.min^{-1}$	10 $dm^3.min^{-1}$
Min. flow rate Q_{min}			4 $dm^3.min^{-1}$	2 $dm^3.min^{-1}$	2 $dm^3.min^{-1}$
Min. measured quantity (MMQ)			2 dm^3	2 dm^3	2 dm^3
Maximum flow rate when dispensing from one nozzle Q_{max}			40 ±4 $dm^3.min^{-1}$ (for dispenser 4701.xx0/40)		
			20 ±2 $dm^3.min^{-1}$ (for dispenser 4701.xx0/20)		
			10 ±1 $dm^3.min^{-1}$ (for dispenser 4701.xx0/10)		
Maximum flow rate when dispensing from both nozzless simultaneously Q_{max}			30 ±3/30 ±3 $dm^3.min^{-1}$ (for dispenser 4701.20x/40/40)		
			30 ±3/5 ±1 $dm^3.min^{-1}$ (for dispenser 4701.11x/40/10)		
			15 ±2/5 ±1 $dm^3.min^{-1}$ (for dispenser 4701.11x/20/10)		
			5 ±1/5 ±1 $dm^3.min^{-1}$ (for dispenser 4701.02x/10/10)		
Ambient operating temperature			-40 °C to +55 °C		
Medium temperature			-10 °C to +50 °C		
Filtration ability			Standard 60 µm		
Reach of dispensing hose			4,5 m (V-line R)		
Max. level of noise			<60 dB		
Power supply of electronics	U_{nap}	P_{nap}	1/N/PE AC 230 V ±15 % 50 Hz		input 85 VA
Power supply of ADAMAT electronics	U_{nap}	P_{nap}	1/N/PE AC 230 V ±15 % 50 Hz		input 120 VA
Power supply of electronic case heating	U_{nap}	P_{nap}	1/N/PE AC 230 V ± 15 %, 50 Hz		input 250 VA

Power supply of hydraulic case heating	U_{nap}	P_{nap}	1/N/PE AC 230 V ± 15 %, 50 Hz	input 950 VA
Basic sensed unit			0,01 dm^3	
Number of impulses per 1 dm^3			100	
Permissible deviation of sensed volume			+/-1 impulse, i.e. 0,01 dm^3	
Price displayed			6 digits with the setting of digit position	
Volume displayed			6 digits with the setting of digit position	
Unit price displayed			4 digits with the setting of digit position	
Total volume counter			electromechanical - 7 digits	
			electronically - 11 digits	
Communication interface			RS 485; EASY CALL Pumalan extended FULL DART NARA standard RS 485; IFSF – LON, TCP/IP (Ethernet)	
Average operating period of a repair			t_{oo} = 25 minutes	
Average service life			t_z = 5 years	

6. MARKING

All manufactured and delivered dispensers are provided with a rating plate, which includes the following data and is located on a visible point of the dispenser body:

1.	Measuring device manufacturer and address	Adast Systems, a.s., CZ – 679 04 ADAMOV 496
2.	Name of measuring device	AdBlue® dispenser
3.	The „CE“ marking and supplementary metrology marking	CE 1383
4.	Type	See enclosure No 16 and 17
5.	Number of EC – type examination certificate	**TCM 141/07 – 4518**
6.	Accuracy class	0,5
7.	Serial number and year of manufacture	According to dispensers manufacturer files
8.	Liquid temperature range – T_{Liq} [°C]	-10 to +50
9.	Ambient temperature range – T_{Amb} [°C]	-40 to +55
10.	Mechanical class	M 2
11.	Electromagnetic class	E 2
12.	Liquid	AdBlue®
13.	Minimum measured quantity (MMQ) [L]	2
14.	Maximum flowrate Q_{max} [L/min]	40
15.	Minimum flowrate Q_{min} [L/min]	4
16.	Maximum pressure p_{max} [bar]	3,2

7. INSTALLATION

7.1. Hydraulic part

ATTENTION!

THE DISPENSER INSTALLATION CAN BE CARRY OUT ONLY BY THE ORGANISATION AUTHORISED BY MANUFACTURER.

Read carefully the article **1. IMPORTANT NOTICE.**

The AdBlue® dispenser can be joined only to process equipment (tanks, piping) of perfect tightness and cleanness. The supplier of the process equipment is responsible for its tightness and cleanness.

Prior to the installation the organisation shall perform the inspection of used power and communication cables.

The dispenser is mounted to the base frame M12 × 70 bolts through special pads (pads are supplied dispenser).

When the AdBlue® dispenser is installed, they shall check the tightness, function of hydraulic equipment of the dispenser, supply piping and fittings. They also check power and communication cables including their lines and fixing.

Prior to official metrological testing the dispenser (every dispensing nozzle) has to operate for min. 5 minutes in max. flow rate

The process and service equipment of filling stations can be operated only when they have been built up according to the approved design and on the basis of positive result of licence regime.

7.2. Wiring

ATTENTION!
For safety operation must be used electrical connection of AdBlue® dispenser from switchboard with oveload protection and for parameters 230 V / 50 Hz / Power supply of electronics and heating - see article 5 - TECHNICAL DATA

Earthing conductor shall be connected to the shaft under every dispenser.

Leads to the AdBlue® dispenser must be sealed to prevent its interior from the penetration of liquids (AdBlue®) or vapours. Only cable terminals resistant to AdBlue® effect can be used in the shafts under dispensers. The cable bushings can always be used for one cable only.

ATTENTION!
Emergency switching off: It shall be enabled to switch off the filling equipment from one point, which is accessible anytime. The electric equipment situated in the explosion hazard area can be switched off by means of the emergency breaker located outside the explosion hazard area. The switch for normal operation can be also used as emergency breaker.

Supply conductors are connected to the junction box located in the dispenser.

The communication line cable is connected to the junction box for the communication line.

There are two wiring systems of the filling station: either the communication line is connected to the dispenser (i.e. self-service operation with the control system) or not (i.e. service operation).

The dispenser in self-service operation with the control system is connected through the communication line to the control system which controls operation of complete filling station (i.e. dispenser release, preselection of volume and price, unit price alteration, selfdiagnostics, etc.).

8. PUTING INTO OPERATION

ATTENTION!
Before start must be made revision of wiring. Also is recomended to heat imide container space to minimum temperature 5 °C (start the heater if needed).

8.1. Puting of the AdBlue® dispenser to operation mode

- Hang up the delivery nozzle.
- Switch on the power supply in main board of filling station (electronics supply in winter and heating).
- By hang out of delivery nozzle will be made display test (test of eights), when the eights will be zerowed the delivery can be started.
- Place the nozzle in.
- In case of turn on of DU with hang out nozzle must bet he nozzle hunged in and hanged out again, to activate DU (reset display).
- After this is possible to provide delivery of AdBlue®.

8.2. Puting of AdBlue® dispenser to OFF mode

- Switch off power feed in filling station main terminal.

8.3. New reseting of AdBlue® dispenser into operation after power supply failure

- After power supply failure or voltage fluctuation will stay data on display about the price and volume of last provided transaction since interval of last time of nozzle hang out.
- In case if power supply happened during of medium tanking , the nozzle has to be hang in (on the display will stay value of the volume and price) and cash in the amount shown on the display.
- By renewing of power supply is the electronic counter in operation mode and another delivery can be made by hang out of the delivery nozzle.

ATTENTION!
After puting into operational mode in expected low temperature period ($T_{amb.}$) under 0 °C, the rating must be turned ON permanatly. This is obligation even in „Out of order" mode.
Termostat of heater to be set on value +5 °C!!

9. OPERATION

By hang out of delivery nozzle the connecting switch controlled by magnet placed in nozzle boot will start the electronic couter of AdBlue® dispenser, will be made reset of the display after it the connecting of pump elektromotor and mening of electromagnetical valve placed in hydraulic vave of AdBlue® dispenser (if installed).

By AdBlue® dispenser for pressurre sytem will be switched in of pump elektromotor placed in container tank imediatelly after hang out of the nozzle (before providing of test and display reset). Electromagnetic valve is open after providing of test and display reset.

After placing of delivery nozzle spout to the vehicle tank and push of nozzle lever the tanking is started (medium delivery). The vehicle tank must be equipped by magnetic adaptor (like ELAFIX 40) to allow the spout open.

Delivery speed is controlled by nozzle lever (pus hor repase). When the dispensing is finished, the nozzle is placed out from vehicle tank input and placed to the nozzle boot of DU will be by magnetic switch to dissconection of power feed to submersible pump.

The records of last dispensing will stay displayed untill next one delivery.

The delivery nozzle is controlled as per instructions shown in enclosure no. 4 of this manual.

10. FUNTION OF MANAGER AND SERVICE KEYBOARD

The **KL-MANINF** (as pic. 4)manager keyboard and the **KL-SERINF** (as pic. 5)service keyboard are delivered as a design with infrared wireless transmission IR. These device are delivered as option.

IR KL-MANINF manager keyboard
The keyboard enables the setting of unit prices and the situation display of electronic totalizers.
The manager keyboard is equipped with four keys marked **„0"**, **„+"**, **„-"** and **„R"**. The **„0"** key is used for the transition to the "setting of unit prices for MAN" and for the termination of any function executed on the manager keyboard.
The **„+"** and **„-"** keys are used for proper setting of the unit price values or for the transition to the mode of "situation display of electronic totalizers".
The **„R"** key is used for check of vapour recovery exhaustion.

IR KL-SERINF service keyboard

The keyboard enables the counter setting and the keying of values for electronic calibration of meters and ATC, the situation display of electronic totalizers, setting of unit prices and setting the vapour exhaust recovery.

The service keyboard is fitted with four keys, **„0"**, **„+"„-"** as a standard and the "**S**" key as an extra key.

The "**S**" key is used for the transition to the mode of "the data setting / calibration".

If the "**S**" key is not used, the service keyboard can be used for all functions controlled by the manager keyboard and the keying is identical with that of the manager keyboard.

Note

If the nozzle has been lifted at least once since the last activation of the counter, the transition to the setting of unit prices is not executed in the MAN mode. The transition to the setting is also not executed even in case the nozzle has been either hung up again without fuel dispensing or previous transaction has not been deactivated by means of RLS entry.

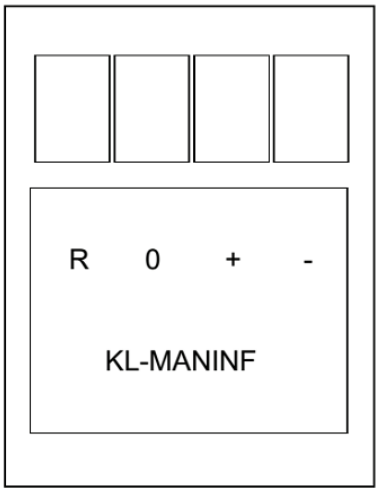

Manager´s keyboard

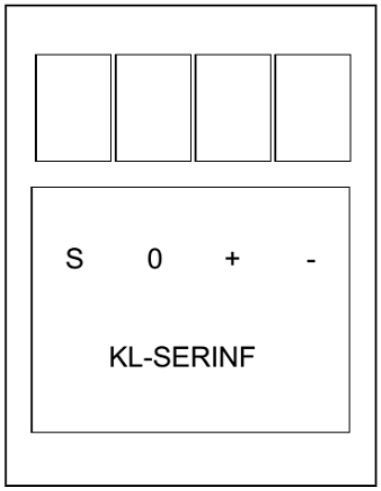

Service keyboard

10.1 Manual setting of unit prices

Necessary conditions for the transition to the setting of unit prices
- MAN mode of operation
- the nozzle has not been lifted since the last activation of the counter
- transaction executed shall be acknowledged (deactivation by means of RLS entries).

In the MAN mode the unit prices of fuel product are set by means of the KL-MANINF manager keyboard or the KL-SERINF service keyboard.

1. The user can enter the setting mode of unit prices by depressing the **„0“** key.
2. In the setting mode of unit prices
   - the number of side for which the unit price is being set ("1" ... A side, "2" ... B side) is displayed on the first line of displays (i.e. on the line of total price)
   - the number of nozzle for which the unit price is being set is displayed on the second line of displays (i.e. the line of total volume)
   - on the third line of displays the digit, the value of which is being set by the user, is flashing (e.g. on the line of unit price)
3. The user
   - raises the numerical value of the digit actually set (i.e. the flashing one), (digit 9 passes into 0), by depressing the "**+**" key we can list through 0-9 values - i.e. the autorepeat function
   - shifts the digit setting to higher digit positions by means of the "**-**" key
     shifts the setting from the highest position of the product unit price to the lowest digit position of the product unit price of the next nozzle by means of the "**-**" key
4. In this way the user can set successively the price values for all nozzles on the A side, then B side (if it exists and the products on this side differ in price).
5. Whenever the user can terminate the setting of the unit price values by depressing the **„0“** key.
6. Now the unit price values have been written in non-volatile storage in this way and the counter sets the MAN mode.

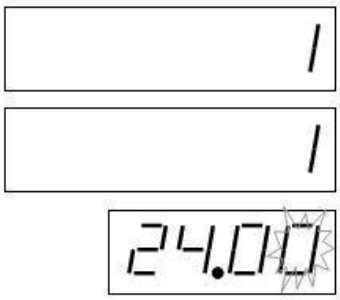

Unit price seting

Shift from most significent digit, side A , nozzle 1

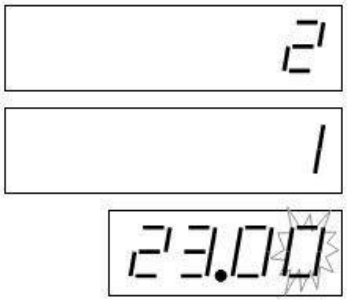

Shift from most significent digit, side B , nozzle 1

10.2 Setting of unit price values from the control system in AUTO mode

In AUTO mode the unit price values are set from the control system for all transactions independently on unit price values set for the MAN mode.

The unit price values for the AUTO mode are set for all dispensing points by dynamic statement (command) "permission to dispense" transmitted from the filling station console or by the "price setting" statement. All these statements are a part of the specification of the EASYCALL communication protocol.

10.3 Display of electronic totalizers

The ADPMPD/T, ADP 1,2/Tcounter is fitted with non-resettle electronic totalizers of volume and price for individual dispensing nozzles.

The totalizers can be displayed on the displays of the side by means of the KL-MANINF manager keyboard or the KL-SERINF service keyboard. The display of the totalizer can be switched by lifting the relevant nozzle.
The sum of the volume (or the sum of the price) is displayed on the displays of the side on the coupled lines of the total price and total volume.
Both displays of the side display an identical sum.
As the first from the left "**U**" character is displayed on the total price line for the display of the volume sum and "**A**" character for the display of the price sum.
The second character from the left displays the highest digit position of the relevant sum.
The sixth character from the left displays the lowest digit position of the relevant sum.
The sums are counted and displayed with decimal place count according to the data setting of the counter.
The side number and the nozzle number of the totalizer displayed at this moment are displayed on the unit price line:

e.g..: 1 - 3...A side - nozzle No. 3;
2 - 1...B side - nozzle No. 1.

Display procedure:

1. Both dispensing points shall be free (transitions are not running at any of the both points and terminated transactions shall be acknowledged).
2. Depress the "**+**" key to display the volume sum. Depress the "**-**" key to display the price sum.
3. All segments light up and light out on the displays of the sides after depressing the "**+**" key (or the "**-**" key) (similarly with the transaction starting to checking if all segments display correctly) and total number of feeding voltage drop-outs is shortly displaced.
4. Then "**U**" and the volume sum of the relevant nozzle (or "**A**" and the price sum of the relevant nozzle) are displayed on the displays of sides.
5. It is possible to carry out the transition to the volume totalizer displays of the next dispensing nozzles by repeated depressing the "**+**" key or by lifting the relevant nozzle (as well as the transition to the price totalizer displays of the next dispensing nozzles by repeated depressing the "**-**" key or by lifting the relevant nozzle).
6. Terminate the scanning of electronic totalizers by depressing the "**0**" key and in case the thermal and electronic calibration are activated, transition in the display mode of their setting occurs.
7. The setting of thermal calibration for relevant nozzle is activated by the ATC text. The setting of electronic calibration of the relevant nozzle counter is activated by the EC text.
8. Terminate the scanning by depressing the "**0**" key and return to the standard mode.

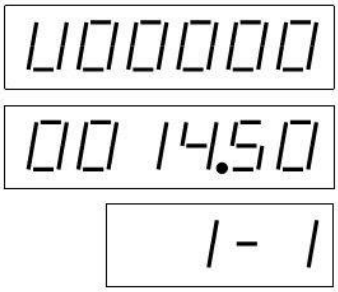

Volume total side A, nozzle 1

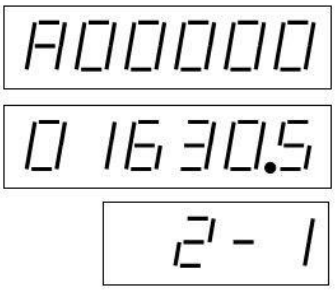

Volume total side B, nozzle 1

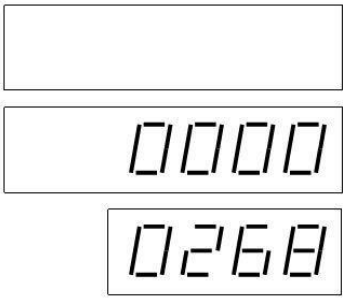

Power fail counter

11. MAINTENANCE OF A DISPENSER AND ITS INDIVIDUAL OPERATING UNITS

The user of the dispenser is obliged to operate the device safely, reliably and in economic way. First of all he is obliged to:

- appoint a worker responsible for the operation and technical conditions of the dispenser and its individual components
- ensure inspection, testing, repairs and maintenance by qualified methods
- carry out records and file documents

ATTENTION!
All repairs of operating units can be carried out only by authorised service repair company and their serviceman with relevant authorisation.

11.1. Filter

The filter serves to trap any mechanical impurities in the fluid. It is equipped with an all-stainless washable mesh filter cartridge with a filtration efficiency of the contaminants 60 microns.

When the decrease of the pumping power is necessary to disassemble the filter cartridge from the filter housing and wash in warm pure water. In the event that impurities do not wash out or damaged filter element to be replaced.

Exchange, possibly cleaning of the filter element by the operator pumping station.

When replacing the filter insert dismantle the filter cover nuts and remove the lid. Grasping the partition hole and pull up to remove the baffle. Then remove the filter cartridge from the filter housing and clean this or insert a new one. Re-install. Prior to reassembly check the condition of seals, "O" rings on the division, and in the filter cover. Alternatively, perform their replacement. Damaged O-rings can cause leaks.

11.2. Piston flowmeter

The meter unit consists of the proper meter with integrated impulse detector. Only authorised specialists can handle the metering unit because the meter is officially sealed. If the seals are damaged, it is necessary to carry out an official inspection and new official sealing.

The condition of the meter (e.g. liquid leakage) shall be followed continuously and repairs shall be performed in time. The stability of the set accuracy for the calibrated meter is at least one million dm^3 for measured dispensed fuel without mechanical impurities. It is recommended to check the meter accuracy after the dispensing of such fuel quantity. Even if the seals are not damaged, the meter shall be periodically inspected and calibrated by a metrological office - once per two years at least.

Also the impulse detector should not be repaired - the meter is replaced only. The fixing of these components is sealed by an official authority, when replaced they are sealed again the official authority.

11.3. Electromagnetic two-stage valve

It is used for two-stage closing of flow when dispensing the preselected volume. The first stage partially closes the flow to approximately 10% of the flow rate just before the set value is achieved. The second stage closes the flow completely. The operation of the two-level stage closing of the valve shall be followed and prospective defect shall be repaired in time. The closing and the throttling functions are eliminated in the service mode. The repair is performed by qualified workers. Fixing bolts of the valve shall be regularly checked and retighten to prevent any liquid leakage.

11.4. Sight glass of the dispenser

It is used for visual inspection of the liquid flow. Possible defects of the sight glass: leakage, broken glass and other damages. All these defects shall be repaired by a qualified worker only.

11.5. Dispensing hose

For dispensers of AdBlue® is used special dispensing hose meets the requirements of DIN 70070.

One end of the dispensing hose is threaded for screwing onto the dispensing nozzle, the adapter for connection to dispenser is on the other end. The dispensing hoses are not repaired but replaced.

ATTENTION!
USE OF UNAUTHORIZED FUEL HOSE CONTAMINATION MAY (DEPRECIATION) GRANTED AdBlue®!!!

11.6. Dispensing nozzle

It is a terminal part of the dispenser by means of which fuels are dispensed. The dispensing nozzle enables:

- service dispensing - the rate of flow can be controlled up to its full stop by means of control lever
- STOP function - the dispensing nozzle stops the flow if the tank is filled up
- safety function - the dispensing nozzle stops the flow in case of unskilled handling or when the nozzle falls out from the fuel tank filler

After both these safety actions the control lever shall be released to get it automatically back to its initial position. The dispensing nozzle is a highly sensitive and complicated closing device. Therefore replacing is recommended instead of repairing at the filling station. The nozzle is unscrewed from the hose adapter while taking care not to lose the screen located in the nozzle. The screen shall be cleaned regularly because the clogged screen may result in substantial reduction of fuel flow.

Nozzle for AdBlue® is a special gun fitted in the discharge pipe solenoid valve prevents refueling media into tanks designed for fuel (diesel).

11.7. Dismantling of covers

It is carried out in required scope during installation, routine maintenance, minor repairs and modifications of electric or hydraulic parts.

The original location of covers must be held in remounting!

Covering of hose and hydraulic modules

To access interior of the hose module for removing hoses, hydraulic pipes, cable glands, cabinets and counter covers gun is necessary to remove the top cover of the hose module allowing eight M6 screws located on top of the cover.

For easier access to the hose module of the dispenser advised to dismantle the still side module cover is

hinged door covering the hose and gun, and unscrewing the 4 screws M8 at the top level cover and 2 screws M8 connecting the cover to the base of the dispenser.

Winding mechanism hose may be removed from the column after removing the nuts M10 at the bottom connecting the winding mechanism with a base and removing the two screws located at the upper pulley and the winding mechanism connecting to the web and the column. Consequently, shift in the direction of the groove in the bottom wall and lifting the winding mechanism can be removed.

To access hydraulic components, distribution boxes and heating to dismantle the door and side cover the hydraulic module unlocking, followed by tilting and sliding the pins.

Covering of counter case

Face covers are disassembled by unlocking the cover and lifting it upwards on hinges. The cover lifted is screwed by means of the cover holder in the upper position.

Any handling the electric and electronic parts may only be carried out by a specialist who is responsible for the safety of the equipment. The IP 54 protection may not be affected during the counter case handling.

It is necessary to check the gasket prior to remounting the cover. Damaged gasket shall be replaced.

Dismounting of the metering unit

Perform removing covers hydraulic module, unscrew the bolts that secure the connection meter with connecting piece. Disconnect the flange connection to electromagnetic valve, dismount the bolts of the integrated sensor and remove this from the meter. Reverse procedure is used for remounting the meter.

Dismounting of the electromagnetic valve

Disassemble the covers of hydraulics, disconnect the joining tube by means of a cap nut. Then dismount the fixing bolts of the valve flange. Release the wires of electromagnetic spools in bushings after removing the covers of the hose module. Then disconnect the wires in the counter case and remove the valve after withdrawing the wires from the wire bundle. Reverse procedure is used for mounting the valve.

Dismantling of distribution piping

Dismantling of pipes is carried out by loosening the cup nuts screwed on the electromagnetic valve thread and on the equal-angle piece in the hose module. Then the tubes can be removed.

11.8. Electronic counter

No maintenance of the electronic counter is performed. Any manipulation with the counter and wiring of the dispenser can be only performed by a qualified person.

The electronic counter itself is repaired by replacement at the filling station.

ATTENTION!

After any service intervention and remounting it is necessary to check visually the tightness of bolted connections and possible fuel leakage shall be eliminated.

11.9. Maintenance instructions for dispenser body parts

Good appearance of dispensers is a part of the filling station standard. Even if the parts of external covering have either been provided with coats of good quality or made of stainless steel, their maintenance should be carried out regularly. Instructions for use specified by the supplier shall be adhered to.

Higher attention should be paid to these parts in winter season because of unfavourable effect owing to aerosol from chloride agents used for road maintenance.

Preservative polishing agents are recommended for the restoration of surfaces stained by fuel liquids.

The maintenance of the dispenser covering is carried out by filling station operators.

ATTENTION!
For the maintenance of the dispenser covering use only agents recommended by the producer of fuel dispensers! Act upon instruction given on agents.

Recommended time intervals for the maintenance of dispenser painted body parts:

- washing the dispenser with hot water - twice per month at least (according to staining severity and season of the year)

- washing the dispenser with surfactant, proper cleaning of covers from salt residues, dust and grease with subsequent restoration of preservative coating on the body parts - once per month (according to

the season of the year)

- washing the dispenser with surfactant and restoration of preservative coating is also recommended after more extensive surface staining by fuels

Recommended time interval for the maintenance of stainless body parts:

ATTENTION!
DO NOT WASH STAINLESS STEEL SHEETS
BY WATER OR EVEN SURFACTANT!!

Recommended procedure for stainless steel sheets:

- **Washing of parts by thorough cleaning of salt residues, dust and grease followed by the renewal of protective coating on body parts - <u>by special agent for the protection of stainless steel sheet</u> - once a month.**
- **Recommended special agents:**
  - **NEOBLANK spray (producer: Chemische Fabrik Dr. Weight GmbH & Co. KG, Mühlenhagen 85 - D - Hamburg**
  - **ANTOX Surface Care 800 S (producer: Chemetall AG, Silostrasse 7, CH - 5606, Dintikon**
  - **ULTRAPUR - d (producer: MMM - Group, SRN)**

12. SUMMARY OF BASIC PRINCIPLES FOR DISPENSER MAINTENANCE

ATTENTION!
Prior to all maintenance activities relevant to mechanical, hydraulic or electric parts it is always necessary to switch el. current off and carry out reliable provision to prevent its incidental switching on.

Service manipulation is performed in accordance with operating regulations for the filling station.

- replace the filter sleeve of the AdBlue® filter in compliance with the mode of operation and ensure proper reassembly of the filter
- keep all operating units of AdBlue® dispenser clean to enable easy identification and rapid repair of unexpected failure
- check systematically all joints and if any leakage is identified, retighten the joint or make it tight
- check the condition of the dispensing nozzle; either repair or replace the nozzle according to the type and extent of the failure
- check the door lock function, grease it occasionally
- pay attention to the cleanness of the AdBlue® dispenser, especially the glass of the counter
- discharge sediments or other contaminants from the tank (containers of AdBlue®) by means of sludge pumps

13. DISASSEMBLY AND DISPOSAL

ATTENTION!
Considering the fact that the residues of AdBlue® always are left in hydraulic distributing systems and in hydraulic parts of the AdBlue® dispenser it is necessary to pay higher attention to the disassembly and disposal. The dismantling must be carried out on dripping grids where the residues of AdBlue® are safely removed into dripping tanks.

Hoses have to be disposed according to special regulations for the disposal of ecologically undesirable materials.

14. TRANSPORT

The customer shall agree to the method of AdBlue® dispenser transport from the manufacturer in the contract. In case Adast Systems, a.s. provides the transport for the customer, the product will be delivered to the agreed destination. The manufacturer possesses the necessary knowledge of handling and

transportation methods. In case the customer is responsible for another method of transport, the manufacturer shall ensure professional loading of the product but is not responsible for the transport itself.

It is generally accepted that the AdBlue® dispenser shall be shipped properly boxed and always fixed to the frame. The dispenser should be protected against damage (of covering and painting), displacement and rolling over on the means of transport. A special frame with holes for forklift is used for the of the dispenser. All manipulation and transport have to be carried out only in vertical position - the AdBlue® dispenser must not be put on its covering.

ATTENTION!
Only forklifts are allowed to be used for manipulation. If other handling devices are used, Adast Systems, a.s. does not guarantee any prospective damage!

15. PACKING AND STORAGE

15.1. Packing

The packing of AdBlue® dispensers differs in dependence on the point of destination. Dispensers for home market are packed up in bubble wrap, while cardboard wrapping is mostly used for abroad. On preliminary agreement of the customer the dispensers delivered abroad can be also packed up in bubble wrap or other similar packing.

15.2. Storage

Max. storage time under the shelter is 3 months and 1 month for outdoor storage with bubble wrapping. Max. storage time under the shelter is 6 months with cardboard packing.

ATTENTION!
Because the hydraulic system of the dispenser may contain residual test medium (demineralised water) must be the dispenser during periods when the ambient temperature drops below 0 ° C, because antifreeze stored in areas where it is guaranteed that the temperature drops below 0 C. There is a danger of damage hydraulic components of the dispenser.

16. GUARANTEE AND CLAIMING

Reliable operation and service life of the dispenser depends on correct attendance and maintenance. Therefore it is necessary that every employee maintaining or attending the dispenser is acquainted with all principles of correct attendance and maintenance and related regulations for AdBlue®.

ATTENTION!
In particular, it is forbidden to use components during maintenance or lubrication, which could cause deterioration of AdBlue®.

Defects and shortcomings owing to incorrect or careless attendance and maintenance of the dispenser and its individual functional parts are not included in the guarantee. Therefore any complaint within this matter would be acknowledged.

If the manufacturer carrying out guarantee repairs identifies excessive quantity of impurities in the hydraulic system, the complaint will not be accepted and expenses will be charged to the user.

Claims will not be acknowledged due to the following reasons:

- Use of unsuitable fluid
- Shortcomings owing to incorrect design or imperfect assembly of "the lower process equipment", i.e. tank location, length and diameter of piping, type and characteristics of fittings etc. – AdBlue® dispenser installation on the filling station must answer the given criteria from point no 15. hereof instructions.
- Leakage in the hydraulic system of the storage system.
- With meters the impurities can result in function locking, excessive wear of slide valve gear, cylinders and packing.
- Defects owing to faulty high-power wiring at the filling station, e.g.:
  - incorrect installation of the switchboard

- incorrect earthing system
- incorrect cable distribution systems - power cables together with communication cables

– Defects from faulty low power wiring at the filling station, faulty wiring of communication cables especially as far as interference is concerned
  - missing UPS (ON LINE) - mains supply
  - standardised voltage values: U nominal ±15 % with frequency 50 Hz

The guarantee does not cover consumable supplies: filter bushings, V-belts, etc.
The guarantee and claiming are specified in the contract.

The guarantee claims can only be asserted at the purchaser of the fuel dispenser.

Claiming faulty function of the dispenser specify the following data:

– Serial number of the dispenser, its name, as specified on the rating plate of the dispenser.
– Precise description of the defect or failure.
– Description of circumstances when the defect occurred.
– If a complaint is claimed within the guarantee period, the seals may not be broken without previous consent.

If the seals have been broken or some not permitted unqualified handling the dispenser found out, the complaint will not be admitted.

For dispensers with control system or with control system and local preselection the complaint concerning the control system, electronics and software of dispensers cannot be acknowledged because of non-observance of wiring conditions and operation of the permanent feeding source UPS (UPS - Uninterruptible Power Supply).

17. SPARE PARTS CATALOGUE

Spare parts catalogues of the dispenser are supplied to service organisations. The user can request the spare part catalogues from the manufacturer.

18. ACCESSORIES

Inside of delivery package is delivered:

1. Adaptor **ELAFLEX type ELAFIX 40 Magnetadapter AdBlue®, for opening of valve in delivery nozzle spout of ELAFLEX type ZVA 3M.0 AdBlue® (with swivel EA 075 AdBlue® and closing magnetic valve / with swivel EA 075 AdBlue® and block magnet).**
2. Electrical set - plug ATEX
3. Special washers
4. Filter insert 60 µm for AdBlue® (all stainless)

The delivery of the dispenser is not:

KL-MANINF infrared manager keyboard - for the selection of unit prices and display of electronic totalizers **for dispensers not connected to the control system** of the filling station (service operation of the filling station) - **can be ordered when ordering the dispenser, or as a spare part under number 9046800802.**

19. DELIVERED DOCUMENTATION

– Instructions for Operation, Maintenance and Installation
– EC Declaration of Conformity

20. ENCLOSURES

Enclosure No 1 View of dispensers ADAST MAJOR V-line R AdBlue® 47xx.xxx

Enclosure No 2 Main dimensions of dispensers V-line R AdBlue® 47xx.xxx

Enclosure No 3 Installation dimensions of V-line R AdBlue® 47xx.xxx dispensers

Enclosure No 4 Manipulation with delivery nozzle AdBlue®

Enclosure No	5	Minimum distances between the AdBlue® dispenser and steady barrier at the location on the filling station
Enclosure No	6	Conditions of wiring and operation of UPS for feeding a control system and electronic part of V-line dispensers Operating conditions of the V-line AdBlue® 47xx.xxx dispensers (pressure design)
Enclosure No	7	Connection of V-line AdBlue® 47xx.xxx dispenser to the filling station switchboard
Enclosure No	8	Connection of the magnetic pulse transmitter ME01-06, MTX 076 and ADAST 41 to the electronic counter ADP1/L - connector X1
Enclosure No	9	Connection of the magnetic pulse transmitter ME01-06, MTX 076 and ADAST 40 to the electronic counter ADP1/T, ADP2/T - connector X2
Enclosure No	10	Connection of the magnetic pulse transmitter ME01-06, MTX 076 and ADAST 41 to the electronic counter ADPMPDx/T, ADPMPDx/T-PWM - connector X3
Enclosure No	11	The sealing of M403.25EAP measuring transducer for electronic calibration
		The sealing of M403.25EAP/1 measuring transducer for electronic calibration
Enclosure No	12	The sealing of ADP1/L electronic calculator
		The sealing of Beta Control ADP1/T and ADP2/T electronic calculator
Enclosure No	13	The sealing of Beta Control ADPMPDx/T and ADPMPDx/T-PWM electronic calculator
		The sealing of totalizing indicating device of the ADP1/T and ADP2/T electronic calculator
Enclosure No	14	The sealing of totalizing indicating device of the ADPMPDx/T and ADPMPDx/T-PWM electronic calculator
Enclosure No	15	A location scheme verification marks on electromagnetic total counter (case version 2017)
Enclosure No	16	The sealing of UNIDATAZ CDC electronic calculator (CPU unit with S3 switch and totalizer)
Enclosure No	17	The model marking on the V-line R AdBlue® 47xx.xxx dispenser
Enclosure No	18	The model marking on the V-line R AdBlue® 47xx.xxx/CAx

© **Adast Systems**, a.s., 679 04 Adamov No. 496, Czech Republic

Regarding continuous development the producer stipulates the right to pursue technical changes!

View of dispensers ADAST MAJOR V-line R AdBlue® 47xx.xxx

Main dimensions of dispensers V-line R AdBlue® 47xx.xxx

V-line AdBlue R 4701.010

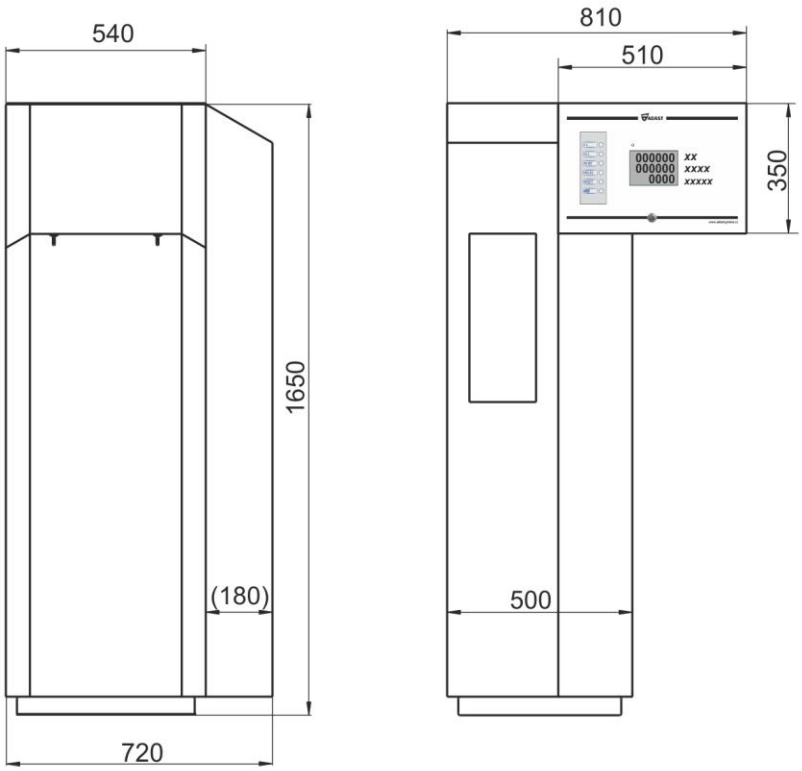

V-line AdBlue R 4701.020

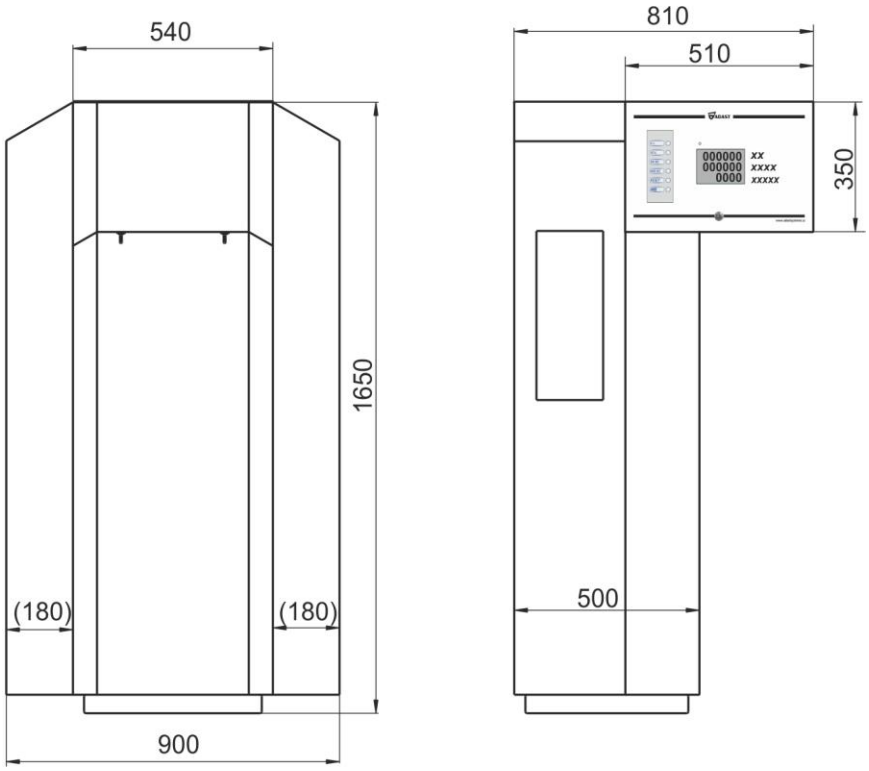

Installation dimensions of V-line R AdBlue® 47xx.xxx dispensers

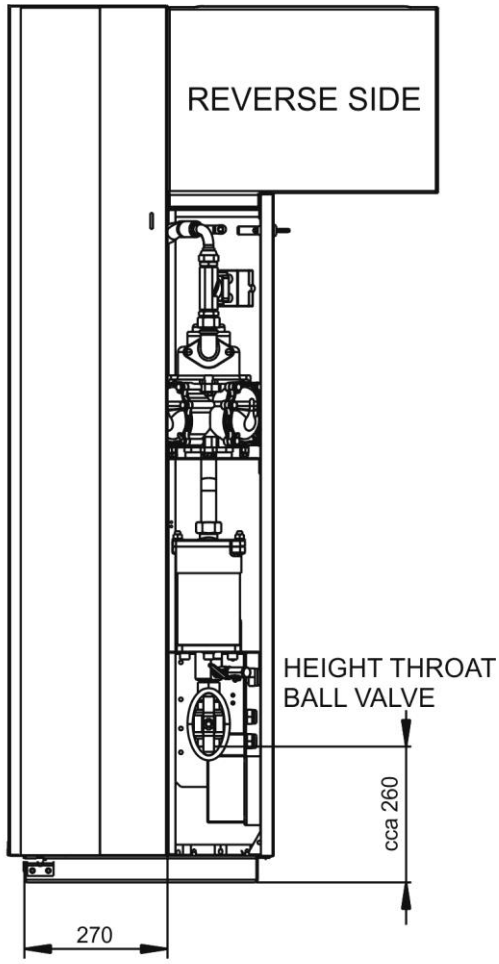

A VIEW OF THE SHAFT
(FROM THE REAR SIDE)

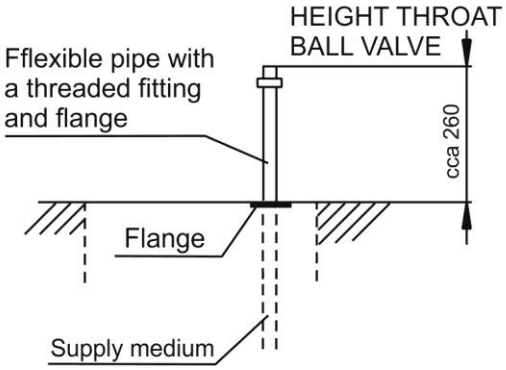

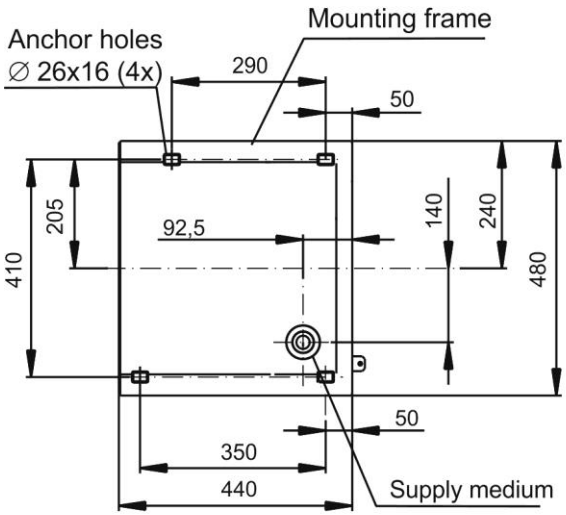

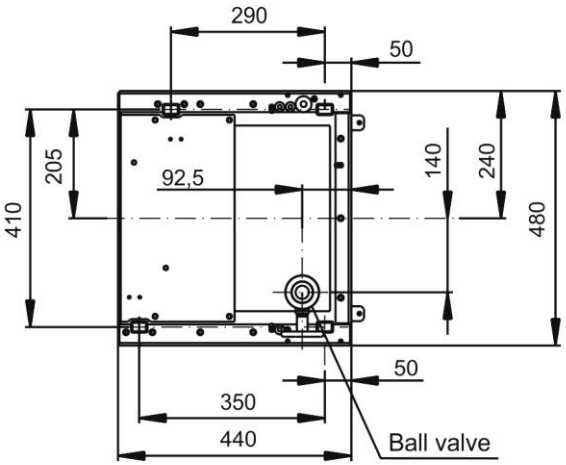

LOOKING INTO THE SHAFT

Manipulation with delivery nozzle AdBlue®

Tank for AdBlue® must be equipped by magnetic adaptor ELAFIX 40 to open the spout.

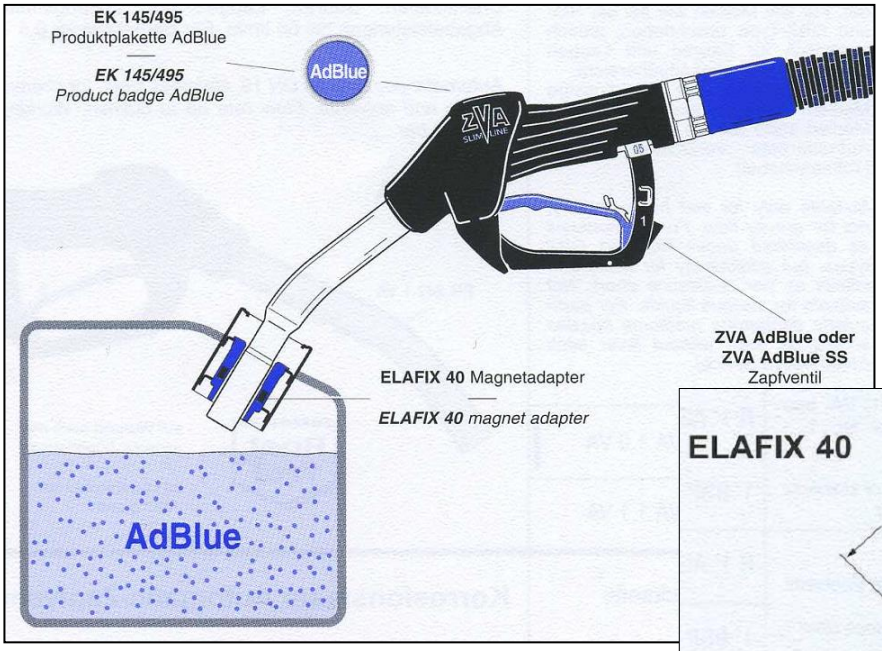

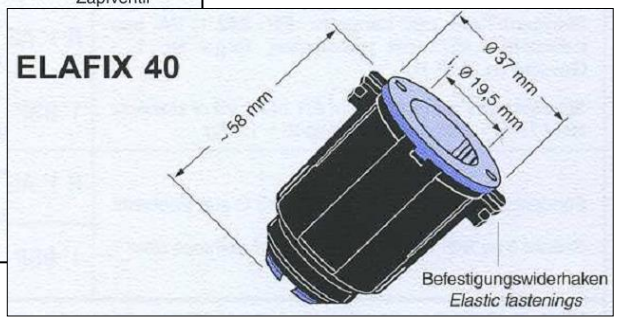

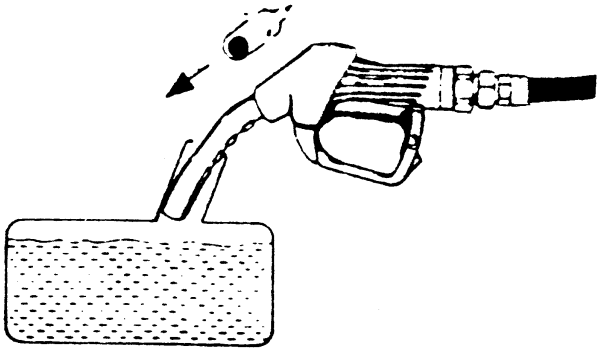

1.

<u>Correct position of dispensing nozzle during filling</u>

The dispensing nozzle is almost in the horizontal position, the ball does not prevent from air passing, the AdBlue® flows through

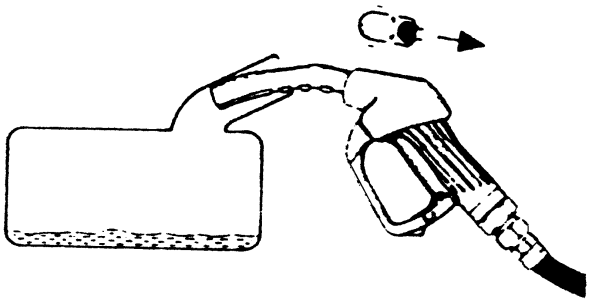

2.

<u>Incorrect position of dispensing nozzle during filling</u>

The dispensing nozzle is diverted from the horizontal plane (drawn position). The ball prevents from air passing - the AdBlue® does not flow through.

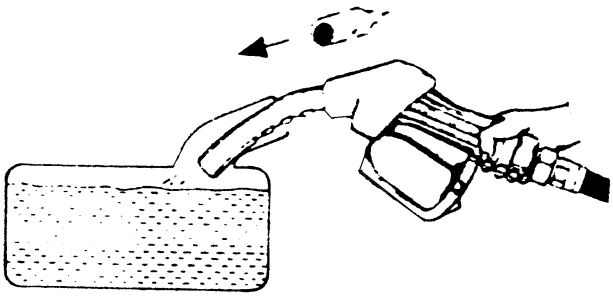

3.

Due to different executions of inlet AdBlue® tank sockets, it is necessary to find an optimum position of the dispensing nozzle, when the fuel still flows through. The flow can be broken when the fuel flow from the dispensing nozzle strikes to the tank filler wall. In such case an optimum position must be found, too.

Minimum distance between the AdBlue® dispenser and steady barrier at the location on the filling station

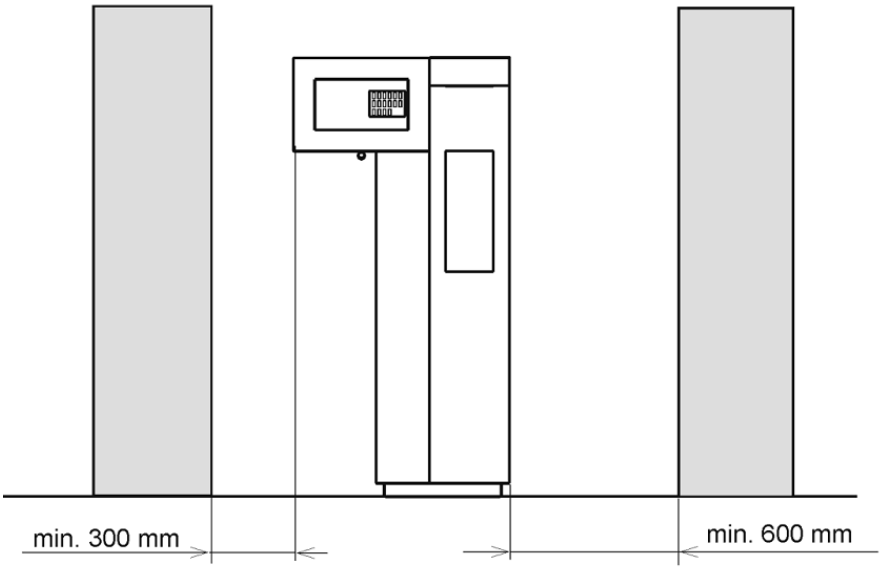

One-sided AdBlue® dispenser

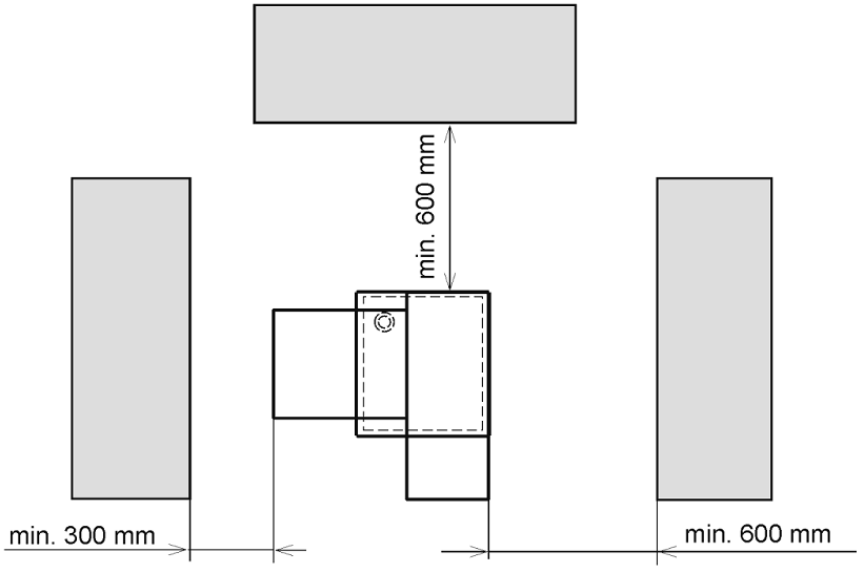

Two-sided AdBlue® dispenser

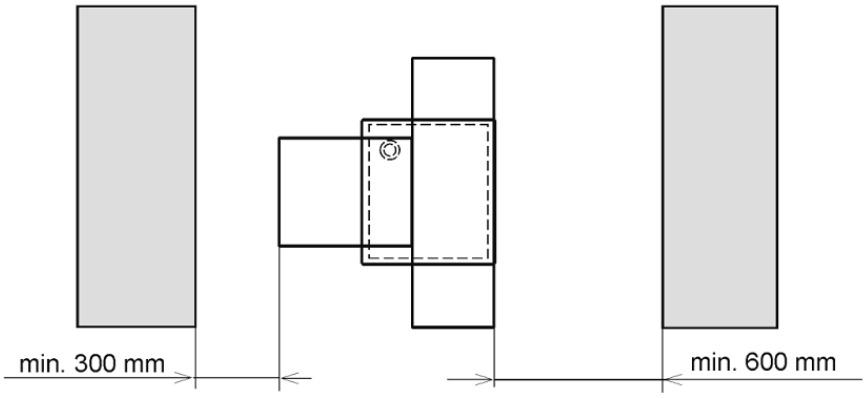

Conditions of wiring and operation of UPS for feeding a control system and electronic part of V-line dispensers

1. All the cooperating electronic circuits of the control system and dispensers must be connected to the UPS and for this point of view they are considered as a closed electronic unit.
2. The control system and electronic instruments of dispensers connected to it as a closed electronic unit must be connected only to one source of UPS.
3. The feeding of perhaps even a part of the system from another source is not permitted.
4. A parallel cooperation of more UPS on one system is not permitted.
5. "Live" conductors of control system supply circuits and dispenser electronic equipment must be galvanic-separated from the mains and even from protective conductors – a system of "swimming zero" is created.
6. To comply with the requirement under item 5, the proper UPS must have galvanic-separated input and output circuits.
7. For feeding of electronic system of the filling station, the UPS of ON LINE type must be used exclusively.
8. For the correct function of UPS, the size of permanently installed load representing max. 60 % of nominal UPS output, must be provided.
9. To the stabilized voltage circuits, no other consumers that are not a part of prescribed technology, can be connected.
10. Therefore the sockets of stabilized voltage must be marked by the description e.g. "Control system feeding".
11. The protection of input circuits of UPS must be dimensioned so that UPS feed outage and total battery discharge did not occur under standard equipment function.

Operating conditions of the V-line AdBlue® 47xx.xxx dispensers (pressure design)

The pressure system of the distribution should be designed with a submerged pump built-in directly into the storage tank under the substance level. The tank should be equipped with a detector of the lowest substance level switching the el. circuit of the pump motor being the min. level attained.

The location of the pump under the lowest fluid level in the storage tank and the min. level control switch shall prevent the access of air or gas into the pump.

P12 = 0 parameter shall be preselected in the electronic counter for the pressure system of submerged pumps operation in the storage tank in case of V-line AdBlue® 47xx.xxx dispensers operation. At first the electronic counter starts up the submerged pump in this mode of operation (the fluid in entire hydraulic system is under pressure) then the counter tests the displays and closes the el. magnetic valve - and the dispensing is started.

Connection of V-line AdBlue® 47xx.xxx dispenser to the filling station switchboard

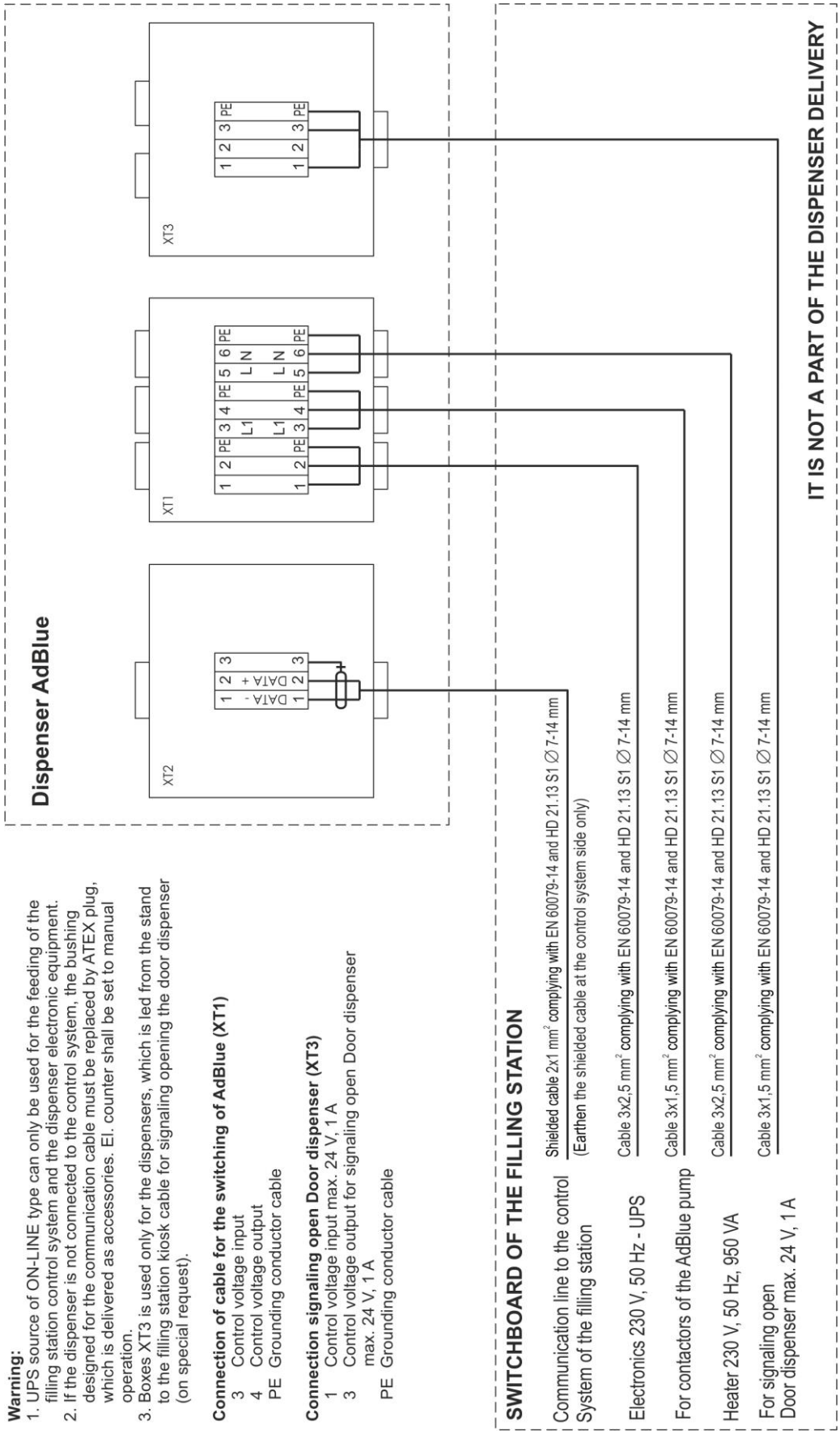

Warning:
1. UPS source of ON-LINE type can only be used for the feeding of the filling station control system and the dispenser electronic equipment.
2. If the dispenser is not connected to the control system, the bushing designed for the communication cable must be replaced by ATEX plug, which is delivered as accessories. El. counter shall be set to manual operation.
3. Boxes XT3 is used only for the dispensers, which is led from the stand to the filling station kiosk cable for signaling opening the door dispenser (on special request).

Connection of cable for the switching of AdBlue (XT1)
3 Control voltage input
4 Control voltage output
PE Grounding conductor cable

Connection signaling open Door dispenser (XT3)
1 Control voltage input max. 24 V, 1 A
3 Control voltage output for signaling open Door dispenser max. 24 V, 1 A
PE Grounding conductor cable

Connection of the magnetic pulse transmitter ME01-06, MTX 076 and ADAST 41 to the electronic counter ADP1/L - connector X1

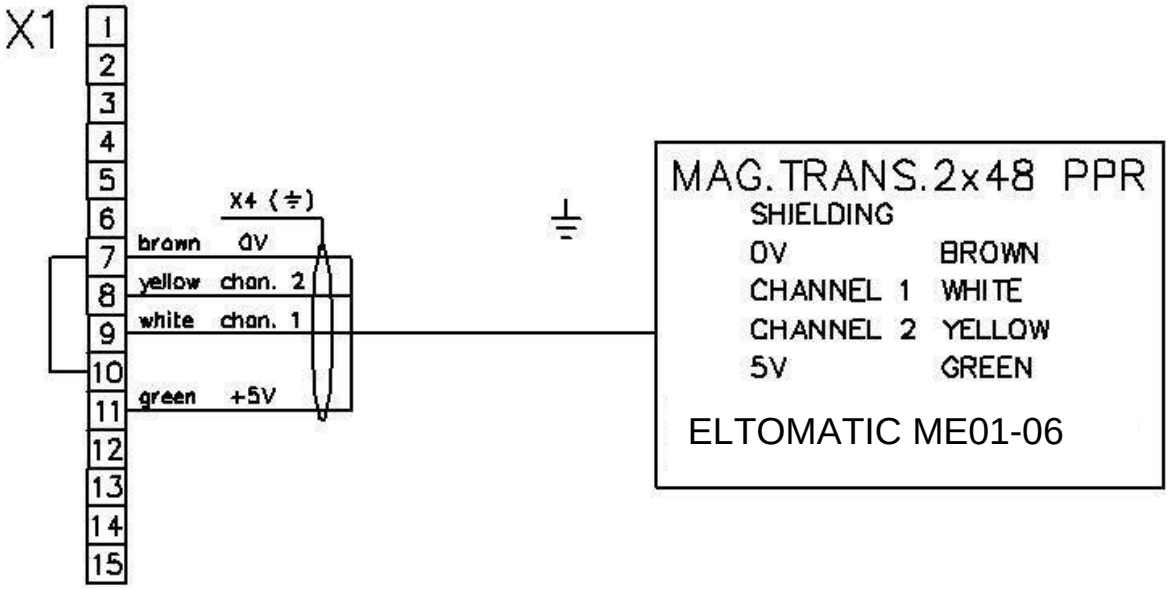

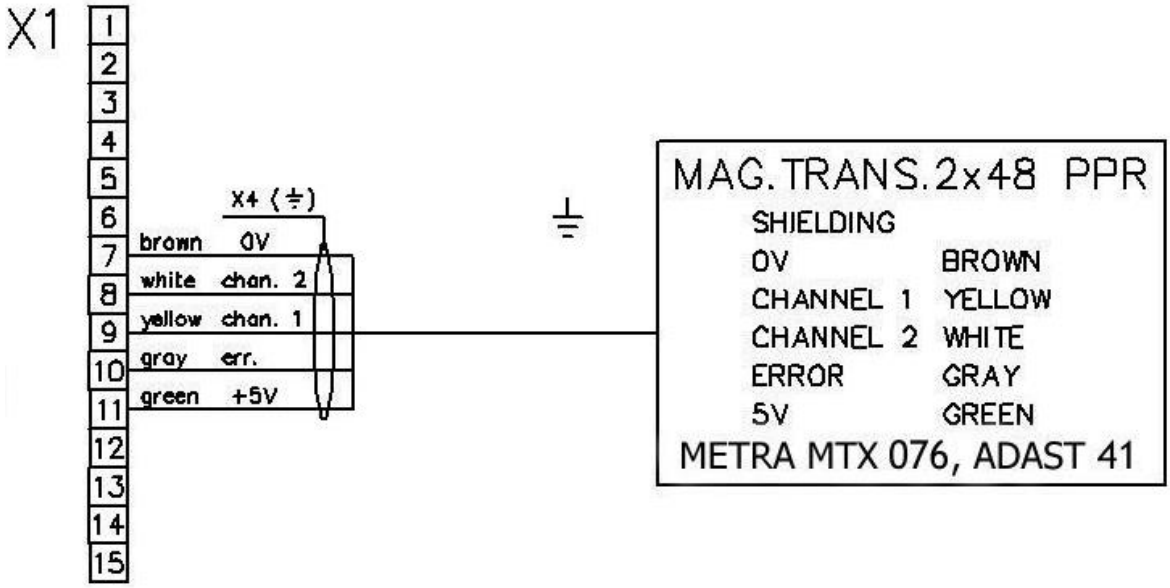

Magnetic pulse transmitter
ME 01-06

Magnetic pulse transmitter
MTX 076

Magnetic pulse transmitter
ADAST 41

Connection of the magnetic pulse transmitter ME01-06, MTX 076 and ADAST 41 to the electronic counter ADP1/T, ADP2/T - connector X2

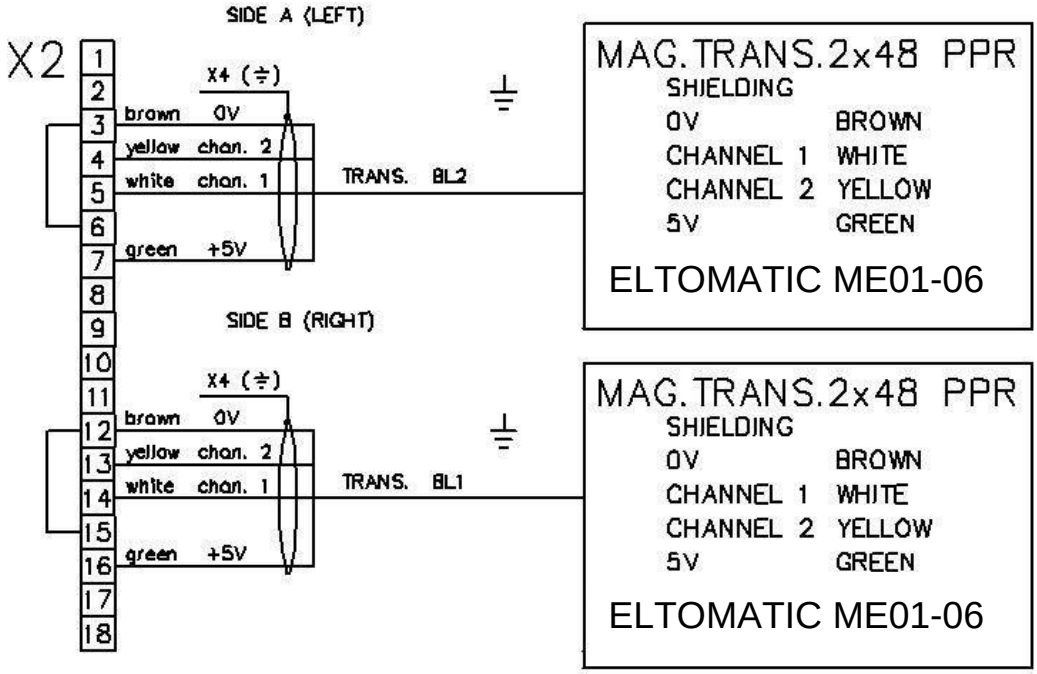

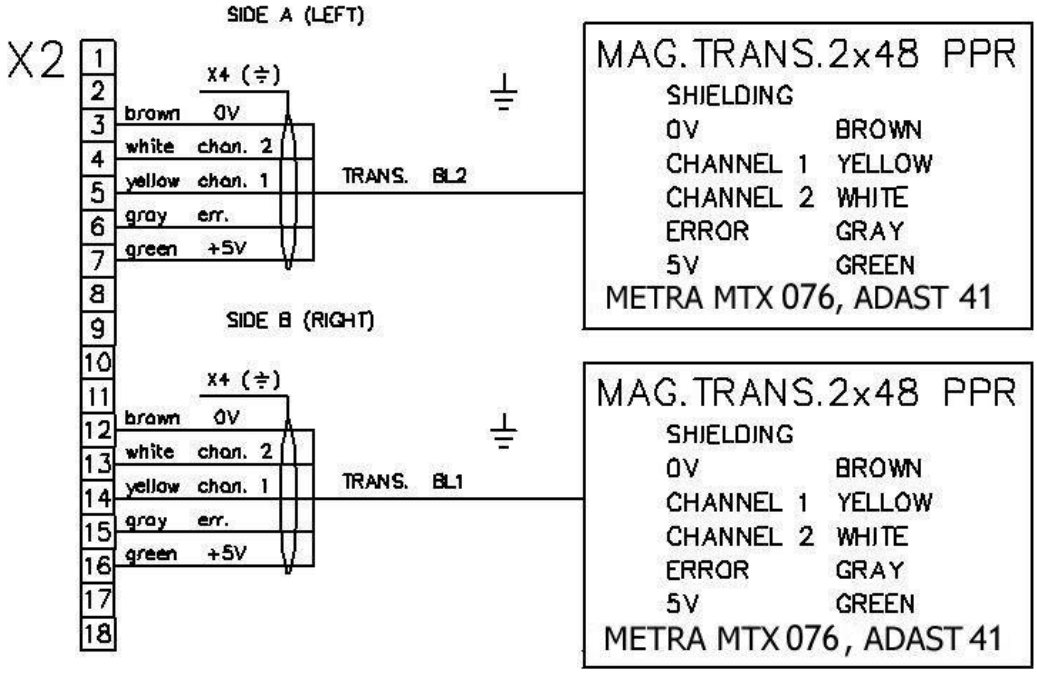

Connection of the magnetic pulse transmitter ME01-06, MTX 076 and ADAST 41 to the electronic counter ADPMPDx/T, ADPMPDx/T-PWM - connector X3

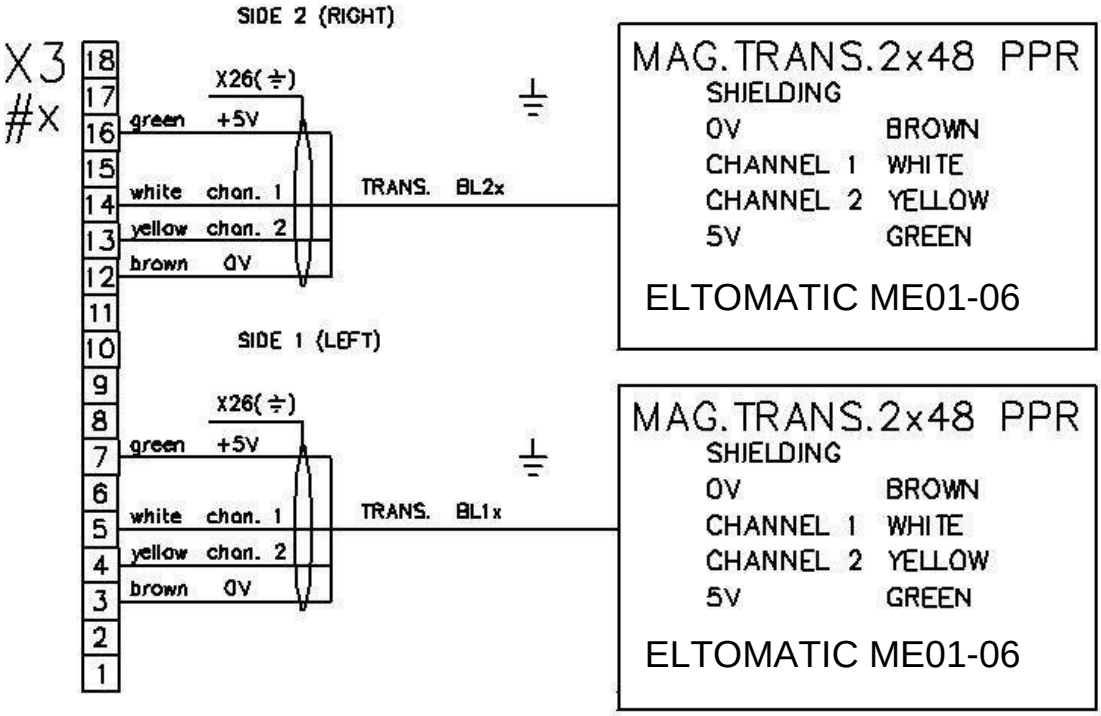

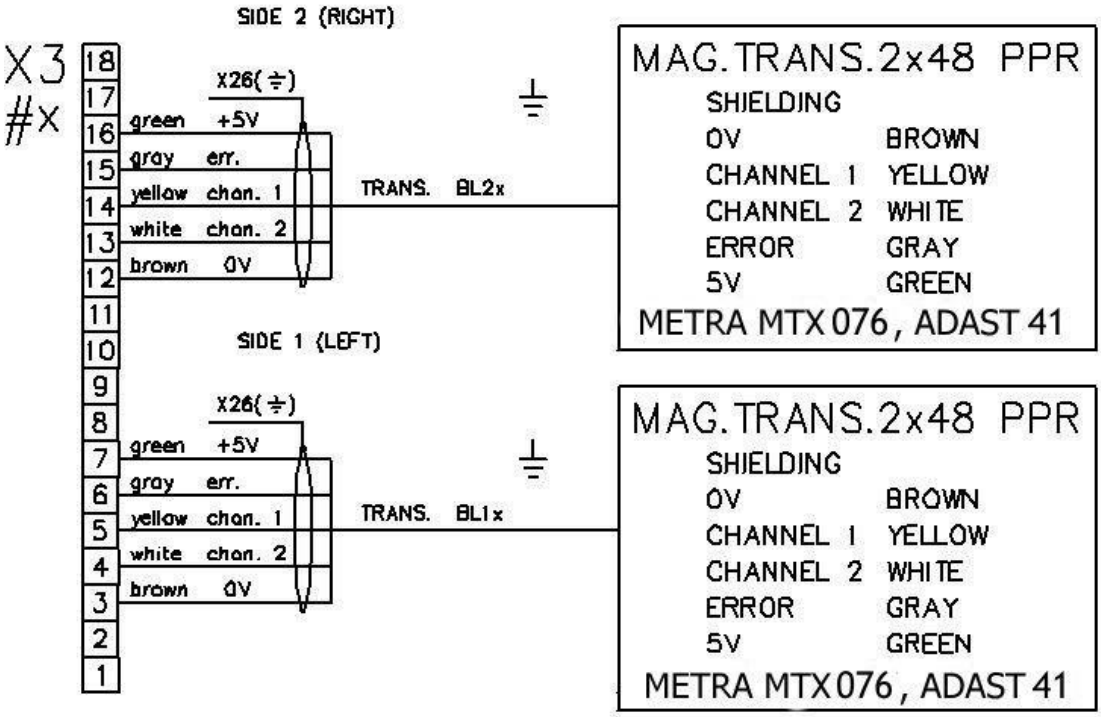

The sealing of M403.25EAP measuring transducer for electronic calibration

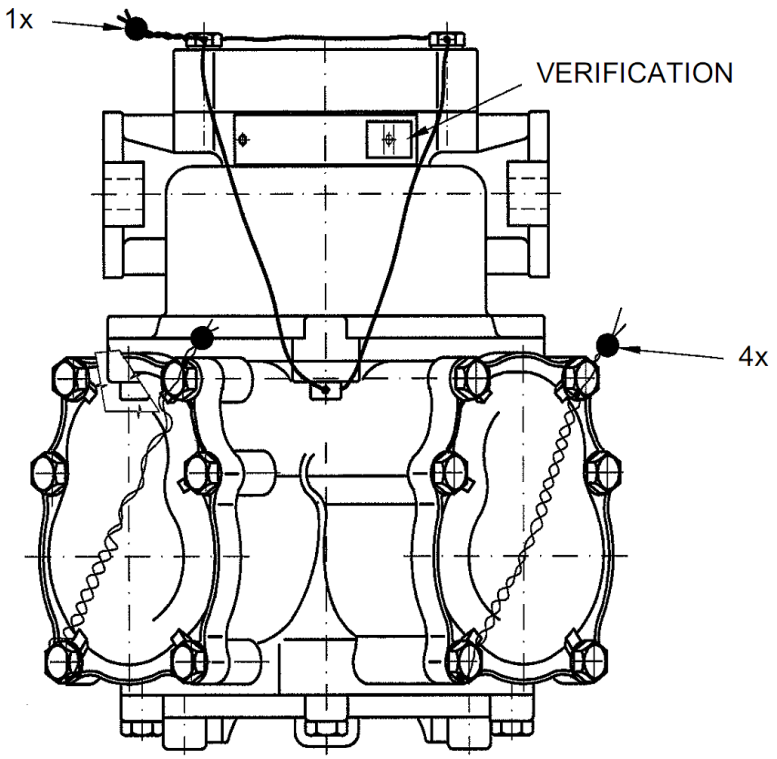

The sealing of M403.25EAP/1 measuring transducer for electronic calibration

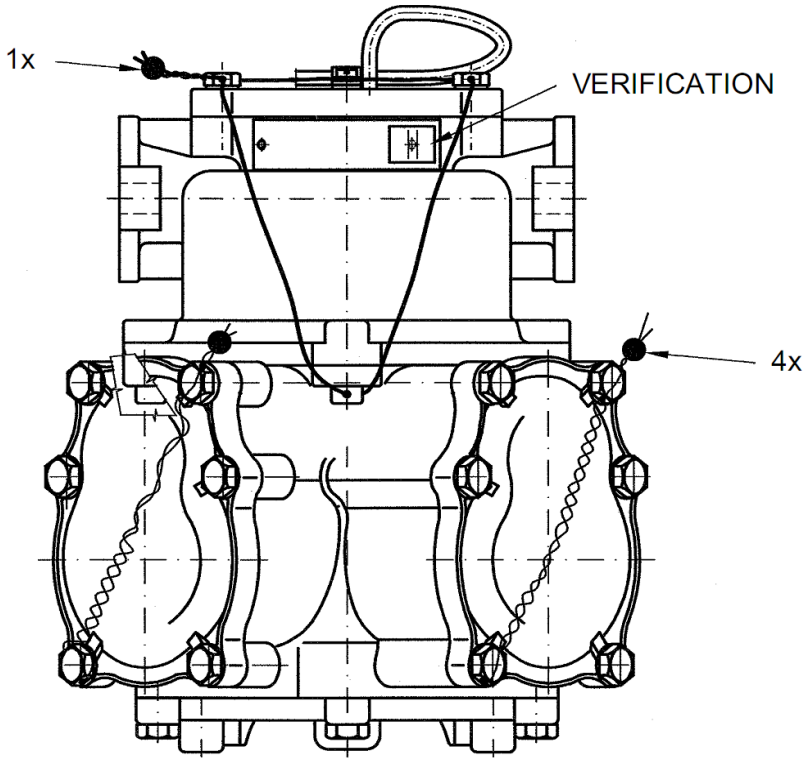

The sealing of ADP1/L electronic calculator

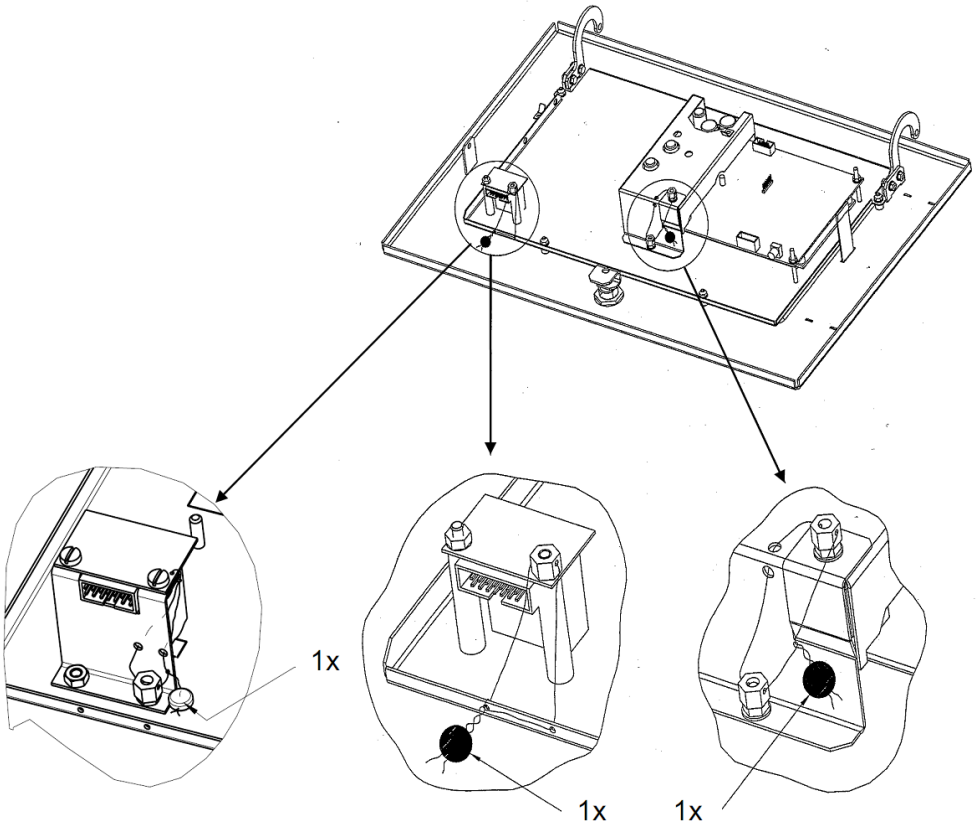

The sealing of Beta Control ADP1/T and ADP2/T electronic calculator

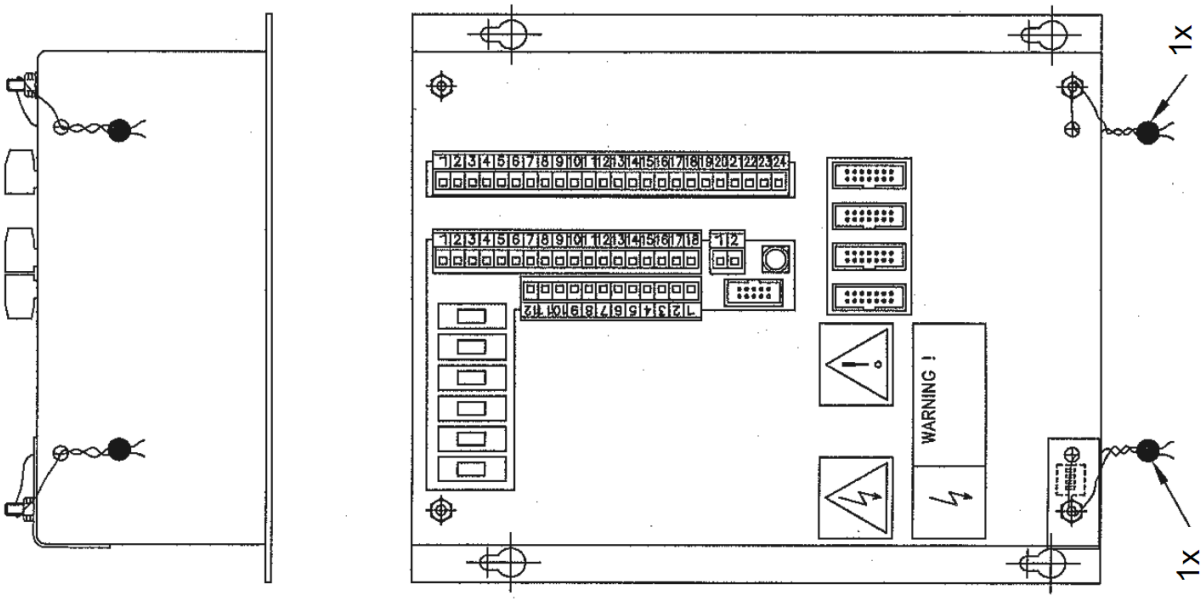

The sealing of Beta Control ADPMPDx/T and ADPMPDx/T-PWM electronic calculator

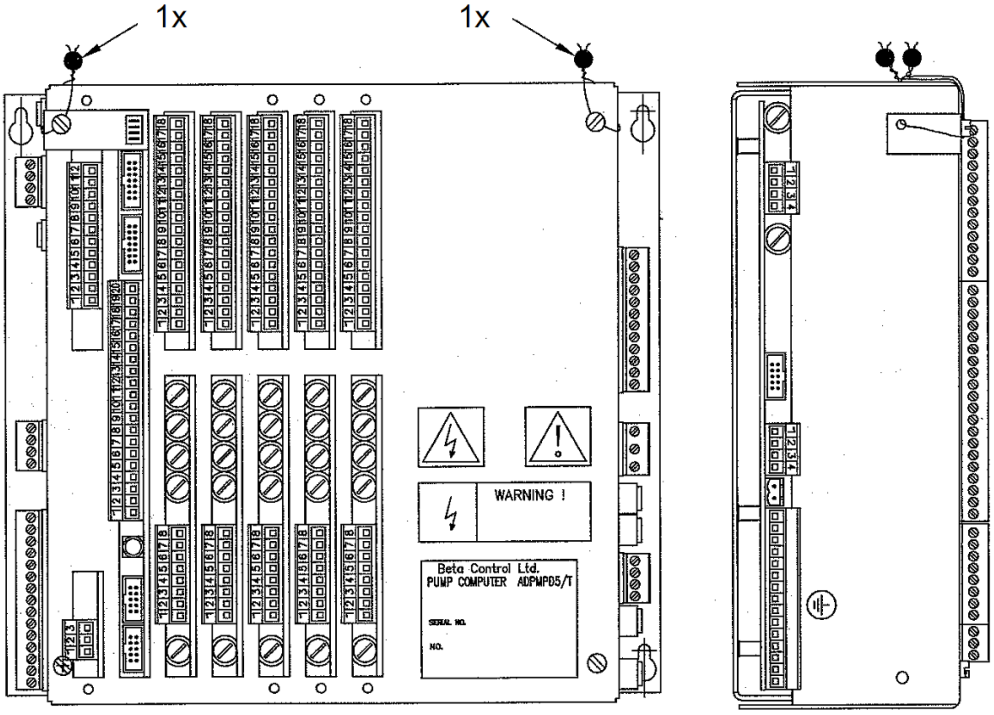

The sealing of totalizing indicating device of the ADP1/T and ADP2/T electronic calculator

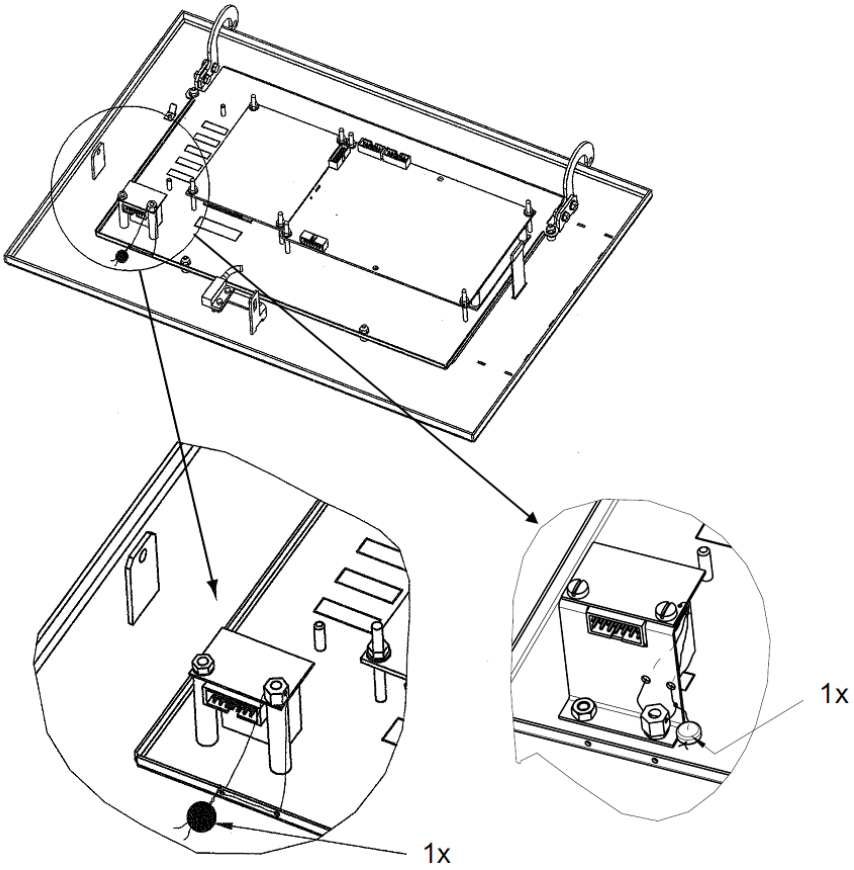

The sealing of totalizing indicating device of the ADPMPDx/T and ADPMPDx/T-PWM electronic calculator

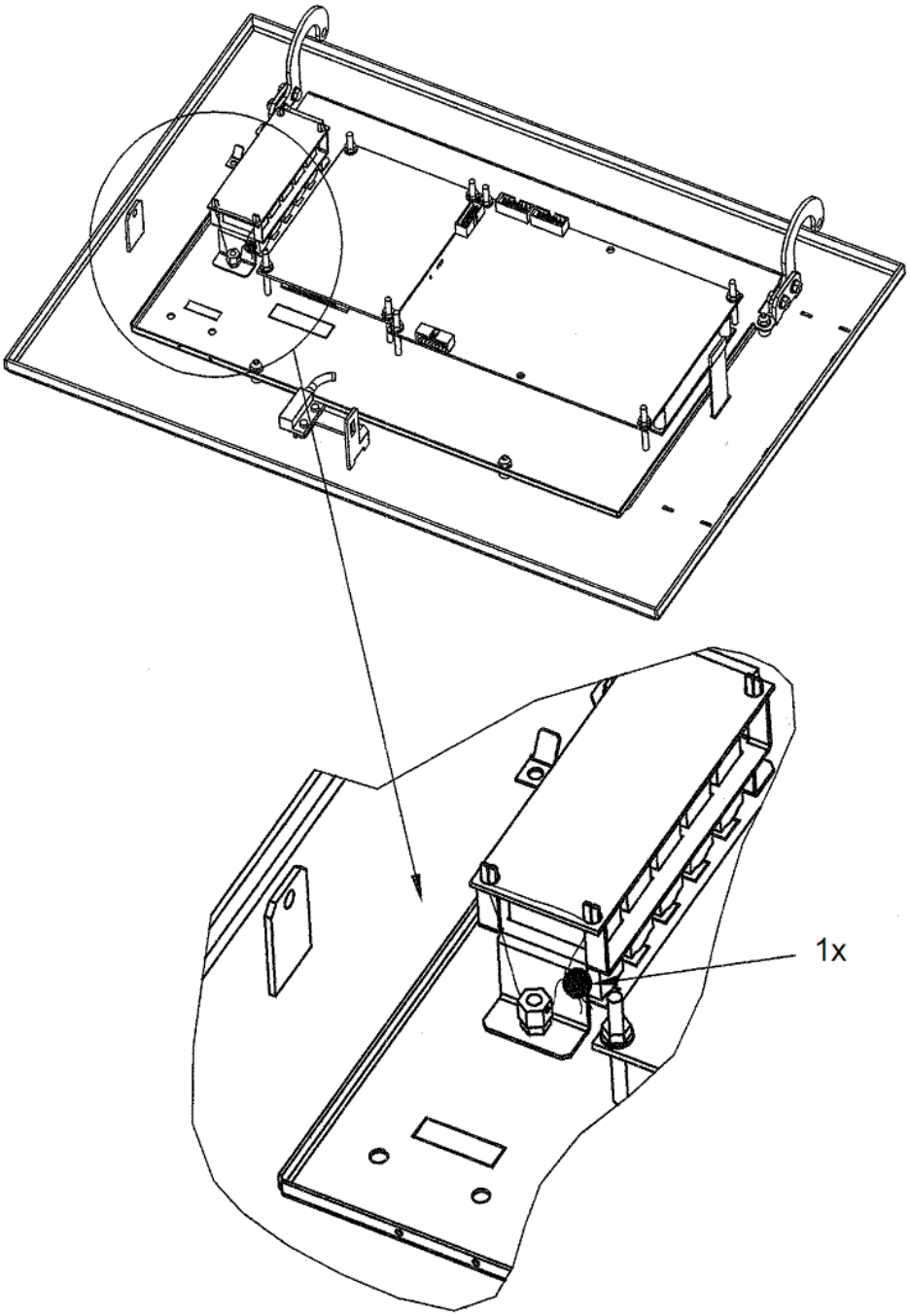

A location scheme verification marks on electromagnetic total counter (case version 2017)

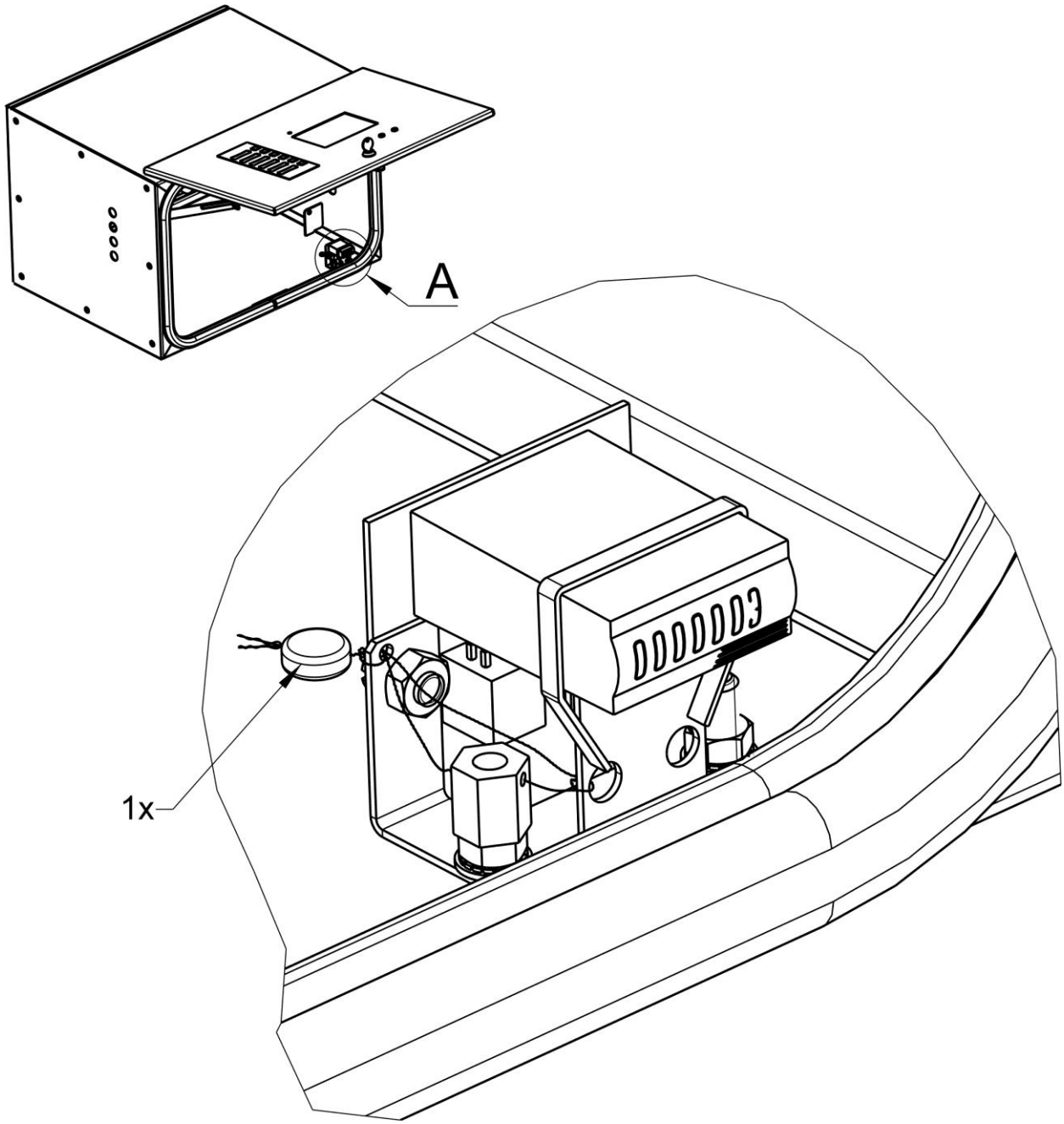

The sealing of UNIDATAZ CDC electronic calculator (CPU unit with S3 switch and totalizer)

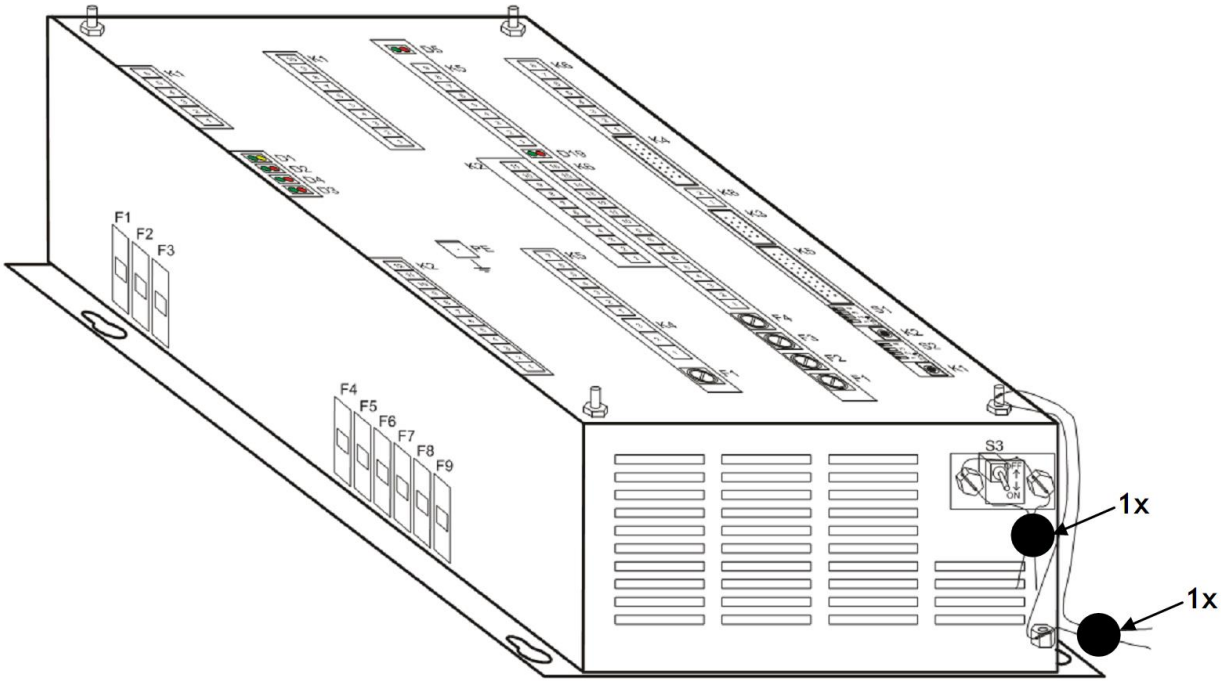

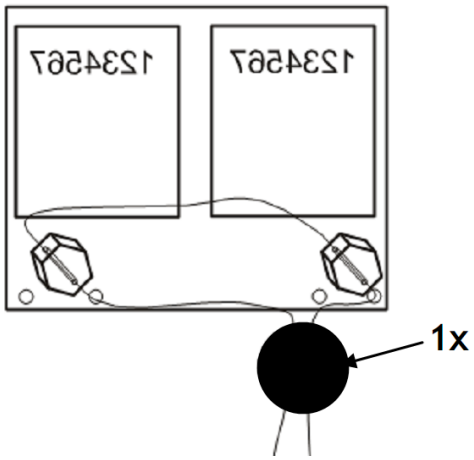

The model marking on the V-line R AdBlue® 47xx.xxx dispenser

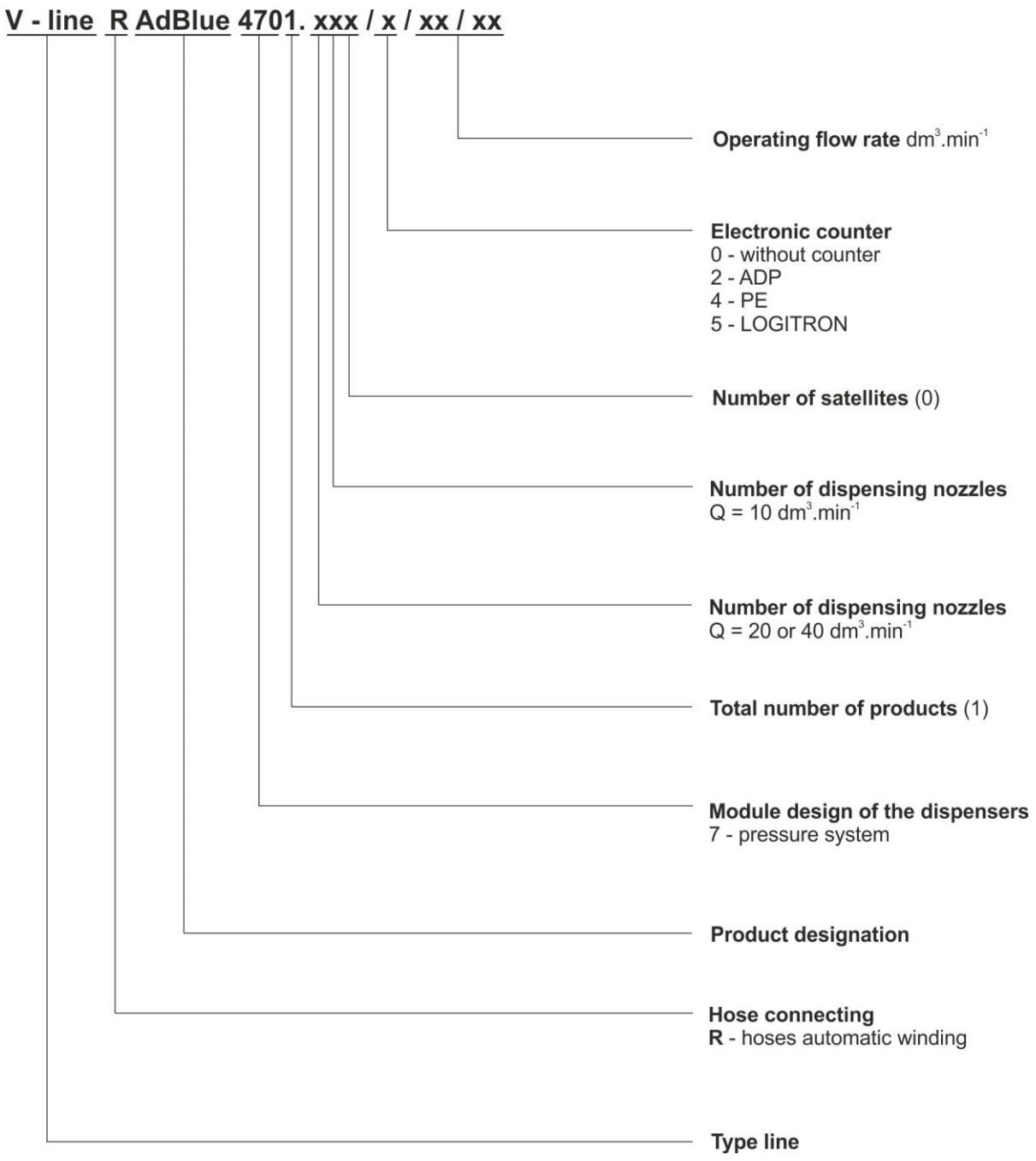

The model marking on the V-line R AdBlue® 47xx.xxx/CA

V - line R AdBlue 4701. xxx / x / CA / xxx / xx / xx

Operating flow rate $dm^3.min^{-1}$

Printer of dispensing document
A - installed
N - non-installed

Acceptance bank and tank cards
C - card CCS + bank cards (accountability centre CCS)
B - bank cards (other accountability centre)
N - without module of bank and tank cards (only local cards)

Card acceptors
M - magnetic card
P - proxy RF card
F - mifare RF card
O - motorola RF card
H - HID RF card
T - touch chip
G - magnetic + chip card
A - G + P
B - G + F
C - G + O
D - G + H

Payment terminal (tank automat)

Type of electronics of the payment terminal
8 - UNIDATAZ
9 - QUITEC

Number of satellites (0)

Number of dispensing nozzles
Q = 10 $dm^3.min^{-1}$

Number of dispensing nozzles
Q = 20 or 40 $dm^3.min^{-1}$

Total number of products (1)

Module design of the dispensers
7 - pressure system

Product designation

Hose connecting
R - hoses automatic winding

Type line